The new degree of comfort.™

Rheem Air Handler

RHBL- Series
X-13 (ECM) Motor
Efficiencies up to 16 SEER

RHAL- Series
PSC Motor
Efficiencies up to 14.5 SEER

- Front or Bottom Return
- Flow Check Piston for cooling or heat pump operation
- Wall-hanging brackets
- Built in Filter Rack
- Suitable for R-410A or R-22 Refrigerants (RHAL Only)
- AHRI Certified
- UL Certified
- Molex Plug Connections for field installed heater kits
- Dual Voltage Direct Drive Blower with multi-speed motor
- Thermoplastic Drain Pan with bottom primary and secondary connections
- Optional Decorative Grill for front return applications
- Optional Factory Installed Condensate Float Switch which shuts off the outdoor unit in event the condensate pan becomes clogged

TABLE OF CONTENTS

Engineering Features 3
Model Number Identification 4
Dimensional Data 5-6
Airflow Performance Data 7-9
Piston Sizing Chart.....10
Electrical Data 11
Accessories 12
Limited Warranty 13

Engineering Features

RHBL/RHAL- Series

- The most compact unit design available, all standard heat air handler models only 36" [915 mm].
- Rugged wall steel cabinet construction, designed for added strength and versatility.
- 1.0" foil faced insulation for excellent thermal and sound performance.
- Four leg blower motor mount.
- Traditional open wire element design for heat applications.
- Indoor coil design provides low air side pressure drop, high performance and extremely compact size.
- Coils are constructed of aluminum fins and internally grooved copper tubing.
- Molded polymer corrosion resistant condensate drain pan is provided for all indoor coils.
- Connection point for high voltage wiring is inside the air handler cabinet. Low voltage connection is made on the outside of the air handler cabinet.
- Concentric knockouts are provided for power connection to cabinet. Installer may pull desired hole size up to 1 3/8 inch inches [35 mm] for 7/8 inch [22 mm] conduit.

[ ] Designates Metric Conversions

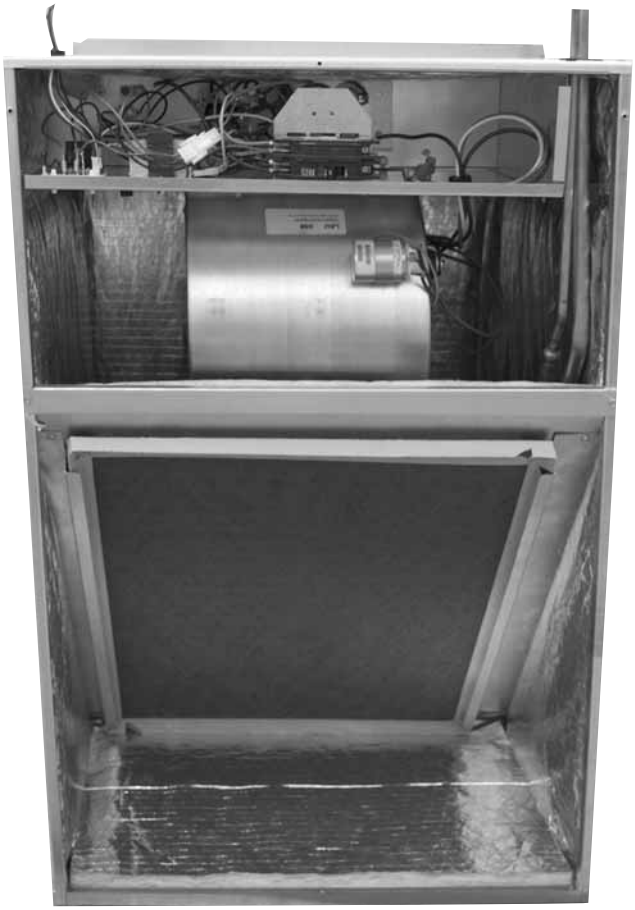

Model Number Identification

R H A L – FR 24 P J N 00 A 000

Options
417 = Float Switch

Design Variation

Electric Heat
00 = NO HEAT
03 = 3 kW
05 = 5 kW
08 = 8 kW
10 = 10 kW

Disconnect Configuration
N = None
B = Breaker

Voltage
J = 208/240/1/60

Metering
P = Piston (R22 or R410A)
T = TXV (R410A)

Capacity
18 = 18,000 BTU/H [5.30 kW]
24 = 24,000 BTU/H [7.03 kW]
30 = 30,000 BTU/H [8.80 kW]
36 = 36,000 BTU/H [10.6 kW]

FR = Front Return

Refrigerant
L = 410A

Front Return/Wall Mount
A = PSC Motor – Standard Efficiency

Classification
H = Air Handler

Rheem

R H B L – FR 24 T J N 00 A 000

Options
417 = Float Switch

Design Variation

Electric Heat
00 = NO HEAT
03 = 3 kW
05 = 5 kW
08 = 8 kW
10 = 10 kW

Disconnect Configuration
N = None
B = Breaker

Voltage
J = 208/240/1/60

Metering
T = TXV (R410A only)

Capacity
24 = 24,000 BTU/H [7.03 kW]
36 = 36,000 BTU/H [10.6 kW]

FR = Front Return

Refrigerant
L = 410A

Front Return/Wall Mount
B = X13 (ECM) Motor – High Efficiency

Classification
H = Air Handler

Rheem

[ ] Designates Metric Conversions

Available Models at J Voltage
RHAL-FR18PJ
RHAL-FR24PJ
RHAL-FR30PJ
RHAL-FR36PJ
RHAL-FR36TJ
RHBL-FR24TJ
RHBL-FR36TJ

- **Supply circuit protective devices may be fuses or "HACR" type circuit breakers.**
- **Largest motor load is included in single circuit.**
- **If non-standard fuse size is specified, use the next larger fuse size.**
- **J Voltage (230V) single-phase air handler is designed to be used with single or three phase 230 volt power. In the case of connecting 3-phase power to the air handler terminal block, bring only two leads to the terminal block. Cap, insulate and fully secure the third lead.**
- **The air handlers are shipped from the factory with the proper indoor coil installed, and cannot be ordered without a coil.**

Unit Dimensions

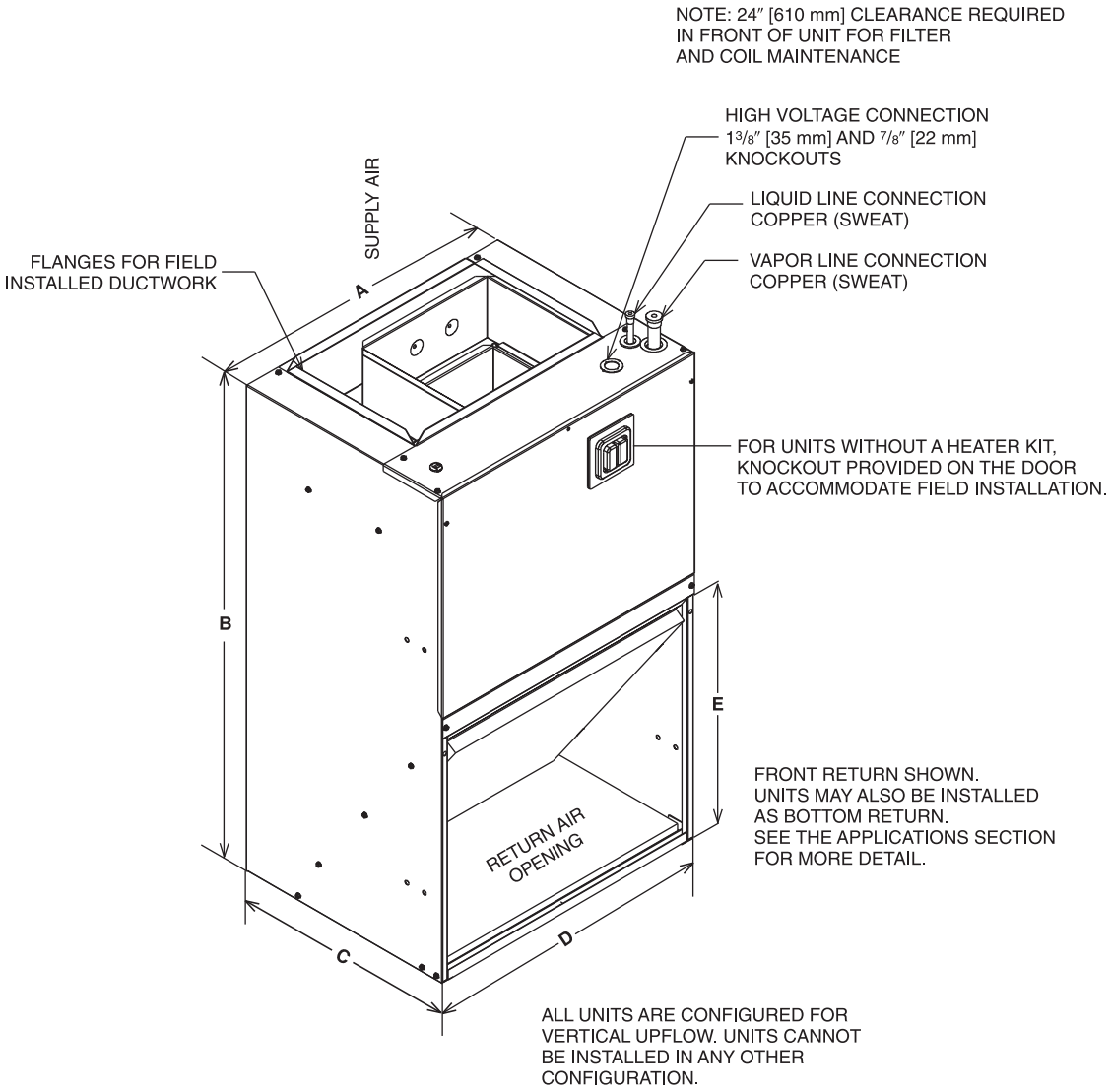

Unit Dimensions & Weights

Dimensional Data								
Model	**(A) Unit Width In. [mm]**	**(B) Unit Height In. [mm]**	**(C) Unit Depth In. [mm]**	**(D) Return Air Opening Width In. [mm]**	**(E) Return Air Opening Height In. [mm]**	**Air Flow CFM (Nom.) [L/s]**		**Unit Weight/ Shipping Weight (Lbs.) [kg]**
						Low	**High**	
RHAL-18	21 1/2 [546.1]	36 [914.4]	17 [431.8]	20 [508]	17 7/16 [442.9]	600 [283]	—	80 [36] / 90 [41]
RHAL-24	21 1/2 [546.1]	36 [914.4]	17 [431.8]	20 [508]	17 7/16 [442.9]	800 [378]	—	80 [36] / 90 [41]
RHAL-30	24 [609.6]	36 [914.4]	21 [533.4]	23 [584.2]	21 3/8 [542.9]	1000 [472]	—	95 [43] / 105 [48]
RHAL-36	24 [609.6]	36 [914.4]	21 [533.4]	23 [584.2]	21 3/8 [542.9]	1200 [566]	—	95 [43] / 105 [48]
RHBL-24	21 1/2 [546.1]	36 [914.4]	17 [431.8]	20 [508]	17 7/16 [442.9]	600 [283]	800 [378]	95 [43] / 105 [48]
RHBL-36	24 [609.6]	36 [914.4]	21 [533.4]	23 [584.2]	21 3/8 [542.9]	1000 [472]	1200 [566]	95 [43] / 105 [48]

[ ] Designates Metric Conversions

Unit Dimensions (con't.)

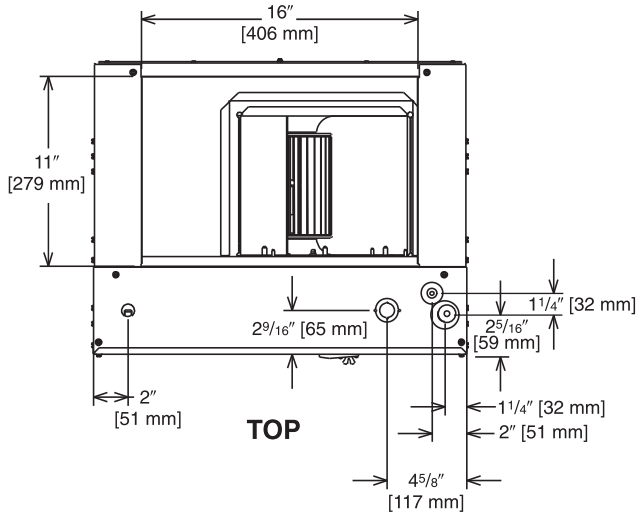

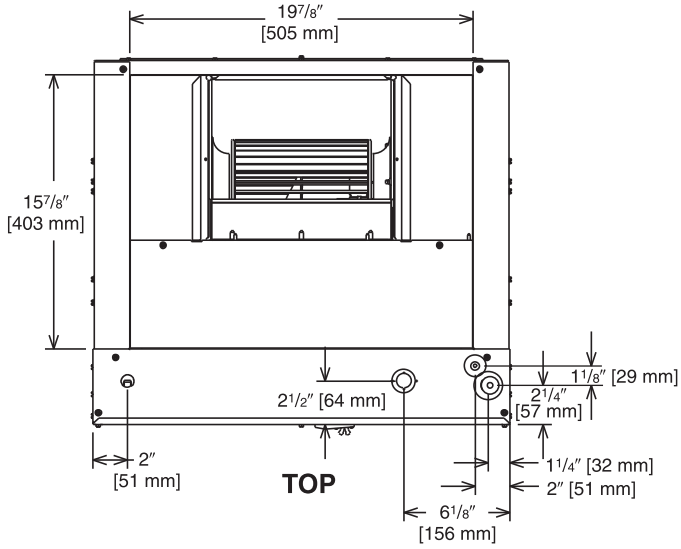

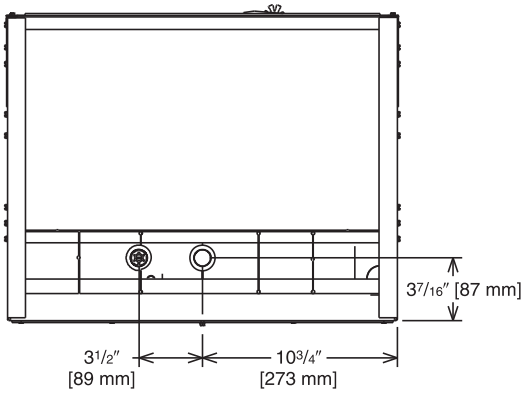

BOTTOM

1 1/2 & 2 TON [5.28 & 7.03 kW] MODELS

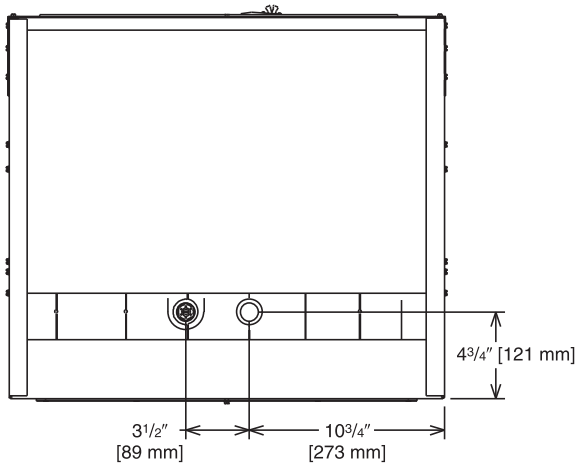

BOTTOM

2 1/2 & 3 TON [8.79 & 10.6 kW] MODELS

[ ] Designates Metric Conversions

Airflow Performance

Airflow performance data is based on cooling performance with a coil and filter in place. Select performance table for appropriate unit size, voltage and number of electric heaters to be used. Make sure external static applied to unit allows operation within the minimum and maximum limits shown in table below for both cooling and electric heat operation. For optimum blower performance, operate the unit in the .3 [8 mm] to .7 inches [18 mm] W.C. external static range. Units with coils should be applied with a minimum of .1 inch [3 mm] W.C. external static range.

Airflow Operating Limits

Cooling BTUH x 1,000 **Cooling Tons Nominal**	**-18** **1.5**	**-24** **2**	**-30** **2.5**	**-36** **3**
Heat Pump or Air Conditioning Maximum Heat/Cool CFM [L/s] (37.5 CFM [18 L/s]/1,000 BTUH) (450 CFM [212 L/s]/Ton Nominal)	675 [319]	900 [425]	1125 [531]	1350 [637]
Heat Pump or Air Conditioning Nominal Heat/Cool CFM [L/s] (33.3 CFM [16 L/s]/1,000 BTUH) (400 CFM [189 L/s]/Ton Nominal)	600 [283]	800 [378]	1000 [472]	1200 [566]
Heat Pump or Air Conditioning Minimum Heat/Cool CFM [L/s] (30.0 CFM [14 L/s]/1,255 BTUH) (360 CFM [170 L/s]/Ton Nominal)	540 [255]	720 [340]	900 [425]	1080 [510]
Maximum kW Electric Heating & Minimum Electric Heat CFM [L/s]	8 450 [212]	10 690 [326]	10 808 [381]	10 976 [461]
Maximum Electric Heat Rise °F [°C]	54 [12]	44 [7]	44 [7]	44 [7]

[ ] Designates Metric Conversions

208V/240V Airflow Performance Data—RHAL (PSC Motor)

Nominal Cooling Capacity Tons	Manufacturer Recommended Air-Flow Range (Min/Max) CFM	Blower Size/ Motor HP [W] # of Speeds	Motor Speed From Factory	Motor Speed		PSC CFM wet coil with filter and heaters External Static Pressure-Inches W.C. [kPa]						
						0.1 [.02]	0.2 [.05]	0.3 [.07]	0.4 [.10]	0.5 [.12]	0.6 [.15]	0.7 [.17]
1.5	850/450 CFM [401/212 L/s]	10x6 1/5 HP [149] 2 Speed Dual Voltage	High	High	CFM	850 [260]	807 [271]	763 [283]	723 [283]	644 [295]	568 [295]	538 [295]
					RPM	948	970	989	1003	1021	1037	1046
					Watts	269	262	252	245	238	226	221
				Low	CFM	642 [271]	606 [260]	575 [366]	521 [366]	450 [366]	—	—
					RPM	766	798	817	864	912	—	—
					Watts	175	170	168	158	149	—	—
2	1016/690 CFM [479/326 L/s]	10x6 1/5 HP [149] 2 Speed Dual Voltage	High	High	CFM	1016 [389]	966 [389]	927 [389]	885 [389]	834 [413]	780 [425]	718 [425]
					RPM	1083	1090	1096	1101	1109	1114	1121
					Watts	380	365	360	349	338	328	311
				Low	CFM	830 [425]	805 [425]	772 [425]	735 [425]	690 [425]	—	—
					RPM	932	950	974	994	1014	—	—
					Watts	270	262	253	244	235	—	—
2.5	1190/808 CFM [562/381 L/s]	10x8 1/4 HP [186] 2 Speed Dual Voltage	High	High	CFM	1190 [566]	1116 [566]	1058 [578]	997 [578]	927 [566]	851 [566]	762 [566]
					RPM	900	927	950	974	997	1018	1038
					Watts	374	361	346	331	320	307	290
				Low	CFM	1034 [566]	983 [555]	931 [555]	868 [566]	808 [578]	—	—
					RPM	836	860	892	921	944	—	—
					Watts	300	291	281	269	260	—	—
3	1330/976 CFM [628/461 L/s]	10x8 1/3 HP [186] 2 Speed Dual Voltage	High	High	CFM	1330 [566]	1262 [566]	1184 [767]	1066 [779]	968 [779]	871 [779]	—
					RPM	1029	1047	1060	1082	1095	1104	—
					Watts	478	456	437	403	376	355	—
				Low	CFM	1189 [791]	1135 [779]	1054 [779]	976 [767]	—	—	—
					RPM	958	984	1012	1037	—	—	—
					Watts	402	385	362	341	—	—	—

Notes:
- All 208/240V PSC motors have voltage taps for 208 and 240 volts.
- All 208/240V PSC motors are shipped on high speed and 240 volts.
- If the application external static is less than 0.5" WC, adjust the motor speed to the low static speed as described below:
  - Unplug the black motor wire off the relay on the control board and plug in the red motor wire.
  - Replace the cap on the black motor wire.
- Voltage change (208/240V motors):
  - Move the orange lead to transformer 208V tap from 240V tap. Replace the wire cap on 240V tap.
  - Unplug the purple motor wire off the transformer and plug in the yellow motor wire.
  - Replace the cap on the purple motor wire.
- The above airflow table lists the airflow information for air handlers with maximum heater allowed for each model.

[ ] Designates Metric Conversions

208V/240V Airflow Performance Data—RHBL (X-13 (ECM) Motor)

Nominal Cooling Capacity Tons	Manufacturer Recommended Air-Flow Range (Min/Max) CFM	Blower Size/ Motor HP [W] # of Speeds	Motor Speed From Factory	Motor Speed		X-13 CFM wet coil with filter and heaters External Static Pressure-Inches W.C. [kPa]						
						0.1 [.02]	0.2 [.05]	0.3 [.07]	0.4 [.10]	0.5 [.12]	0.6 [.15]	0.7 [.17]
1.5	827/474 CFM [390/224 L/s]	10x6 1/3 HP [249] 2 Speed Dual Voltage	5	3	CFM	827 [390]	804 [379]	779 [368]	740 [349]	708 [334]	659 [311]	608 [287]
					RPM	1020	1035	1068	1095	1119	1138	1147
					Watts	198	207	206	204	211	205	189
			5	2	CFM	599 [283]	578 [273]	544 [257]	509 [240]	474 [224]	—	—
					RPM	832	875	905	935	963	—	—
					Watts	95	96	108	102	112	—	—
2	977/708 CFM [461/334 L/s]	10x6 1/3 HP [249] 2 Speed Dual Voltage	5	5	CFM	977 [461]	930 [439]	898 [424]	850 [401]	801 [378]	746 [352]	687 [324]
					RPM	1120	1132	1136	1141	1146	1153	1160
					Watts	294	271	266	257	239	231	214
			5	4	CFM	811 [383]	785 [370]	759 [358]	726 [343]	708 [334]	—	—
					RPM	982	1008	1026	1050	1081	—	—
					Watts	177	186	182	188	189	—	—
2.5	1170/897 CFM [552/423 L/s]	10x8 1/2 HP [373] 2 Speed Dual Voltage	5	3	CFM	1170 [552]	1127 [532]	1085 [512]	1048 [495]	1012 [478]	973 [459]	943 [445]
					RPM	886	921	958	986	1022	1053	1083
					Watts	267	275	287	290	301	305	315
			5	2	CFM	1053 [497]	1003 [473]	969 [457]	928 [438]	897 [423]	—	—
					RPM	835	864	903	933	973	—	—
					Watts	212	216	227	232	242	—	—
3	1316/1049 CFM [621/495 L/s]	10x8 1/2 HP [373] 2 Speed Dual Voltage	5	5	CFM	1316 [621]	1275 [602]	1229 [580]	1191 [562]	1151 [543]	1093 [516]	1039 [490]
					RPM	974	1006	1036	1063	1098	1120	1131
					Watts	365	378	383	390	399	393	377
			5	4	CFM	1208 [570]	1172 [553]	1125 [531]	1087 [513]	1049 [495]	—	—
					RPM	906	938	968	1002	1030	—	—
					Watts	284	299	306	315	322	—	—

Notes: X-13 motor speed changes.
All X-13 motors have 5 speed taps. Speed tap 1 is for continuous fan. Speed tap 2 (low static) and speed tap 3 (high static) are for lower tonnage. Speed tap 4 (low static) and speed tap 5 (high static) are for higher tonnage.
X-13 air handlers are always shipped from factory at speed tap 5. To change to 1.5-ton or 2.5-ton airflow, move the blue wire to speed tap 2 or 3 on the X-13 motor. The low static speed tap 2 (lower tonnage) and 4 (higher tonnage) are used for external static below 0.5" WC. The high static speed tap 3 (lower tonnage) and 5 (higher tonnage) are used for external static exceeding 0.5" WC. Move the blue wire to the appropriate speed tap as required by the application needs.

- The airflow for continuous fan (speed tap 1) is 50% of the speed tap 4 airflow.
- The above airflow table lists the airflow information for air handlers with maximum heater allowed for each model.

[ ] Designates Metric Conversions

Piston Sizing Chart

Indoor Unit	Factory Piston	SEER Rating OD Unit	Nominal Tons	Refrigerant	Orifice Size
RHAL-FR18PJ	0.047	13	1.5	R410a	0.047
		14	1.5	R410a	0.049
		13	1.5	R22	0.049
		12	1.5	R22	0.051
		10	1.5	R22	0.053
RHAL-FR24PJ	0.053	13	2	R410a	0.053
		14	2	R410a	0.057
		13	2	R22	0.057
		12	2	R22	0.061
		10	2	R22	0.063
RHAL-FR30PJ	0.061	13	2.5	R410a	0.061
		14	2.5	R410a	0.063
		13	2.5	R22	0.065
		12	2.5	R22	0.065
		10	2.5	R22	0.065
RHAL-FR36PJ	0.065	13	3	R410a	0.065
		14	3	R410a	0.068
		13	3	R22	0.069
		12	3	R22	0.070
		10	3	R22	0.070

RHAL/RHBL Electrical Data – Blower Motor Only – No Electric Heat

Model/Nominal Cooling Tons	Voltage	Phase	Hertz	HP [W]	RPM	Speeds	Circuit Amps.	Minimum Circuit Ampacity	Maximum Circuit Protector
RHAL18	208/230	1	60	1/5 [149]	1075	2	1.5	3	15
RHAL24	208/230	1	60	1/5 [149]	1075	2	1.5	3	15
RHAL30	208/230	1	60	1/4 [186]	1075	2	2.5	4	15
RHAL36	208/230	1	60	1/3 [249]	1075	2	2.5	4	15
RHBL24	208/230	1	60	1/3 [249]	300-1100	4	1.6	3	15
RHBL36	208/230	1	60	1/2 [373]	300-1100	4	2.7	4	15

*Blower motors are all single phase motors.

RHAL/RHBL Electrical Data – with Electric Heat

Installation of the U.L. Listed original equipment manufacturer provided heater kits listed in the table below is recommended for all auxiliary heating requirements.

Cooling Capacity Tons	Model No.	Heater kW (208/240V)	PH/Hz	No. Elements - kW Per	Type Supply Circuit	Circuit Amps.	Motor Ampacity	Minimum Circuit Ampacity	Maximum Circuit Protection
RHAL 18	RXHJ-21B/T03J	2.25/3.0	1/60	1-3.0	Single	10.8/12.5	1.5	16/18	20/20
	RXHJ-21B/T05J	3.6/4.8	1/60	1-4.8	Single	17.3/20.0	1.5	24/27	25/30
	RXHJ-21B/T08J	5.4/7.2	1/60	2-3.6	Single	26.0/30.0	1.5	35/40	35/40
RHAL/RHBL 24	RXHJ-21B/T03J	2.25/3.0	1/60	1-3.0	Single	10.8/12.5	1.5	16/18	20/20
	RXHJ-21B/T05J	3.6/4.8	1/60	1-4.8	Single	17.3/20.0	1.5	24/27	25/30
	RXHJ-21B/T08J	5.4/7.2	1/60	2-3.6	Single	26.0/30.0	1.5	35/40	35/40
	RXHJ-21B/T10J	7.2/9.6	1/60	2-4.8	Single	34.6/40.0	1.5	46/52	50/60
RHAL 30	RXHJ-24B/T03J	2.25/3.0	1/60	1-3.0	Single	10.8/12.5	2.5	17/19	20/20
	RXHJ-24B/T05J	3.6/4.8	1/60	1-4.8	Single	17.3/20.0	2.5	25/29	25/30
	RXHJ-24B/T08J	5.4/7.2	1/60	2-3.6	Single	26.0/30.0	2.5	36/41	40/45
	RXHJ-24B/T10J	7.2/9.6	1/60	2-4.8	Single	34.6/40.0	2.5	47/54	50/60
RHAL/RHBL 36	RXHJ-24B/T03J	2.25/3.0	1/60	1-3.0	Single	10.8/12.5	2.5	17/19	20/20
	RXHJ-24B/T05J	3.6/4.8	1/60	1-4.8	Single	17.3/20.0	2.5	25/29	25/30
	RXHJ-24B/T08J	5.4/7.2	1/60	2-3.6	Single	26.0/30.0	2.5	36/41	40/45
	RXHJ-24B/T10J	7.2/9.6	1/60	2-4.8	Single	34.6/40.0	2.5	47/54	50/60

- Electric heater BTUH - (heater watts + motor watts) x 3.414 (see airflow table for motor watts.)
- Supply circuit protective devices may be fused or "HACR" type circuit breakers.
- If non-standard fuse size is specified, use next size larger standard fuse size.
- Largest motor load is included in single circuit or circuit 1 of multiple circuits.
- No electrical heating elements are permitted to be used with A Voltage (115V) air handler.
- J voltage (230V) single phase air handler is designed to be used with single or three phase 230 volt electric heaters. In the case of connecting 3 phase power to air handler terminal block without the heater, bring only two leads to terminal block, cap, insulate and fully secure the third lead.
- Do not use 480 volts electrical heaters on 230 volts air handler.

Electrical Wiring:

Power Wiring

- Field wiring must comply with the National Electrical Code (C.E.C. in Canada) and any applicable local ordinance.
- Supply wiring must be 75°C minimum copper conductors only.
- See electrical data for product Ampacity rating and Circuit Protector requirement.

Grounding

- This product must be sufficiently grounded in accordance with National Electrical Code (C.E.C. in Canada) and any applicable local ordinance.
- A grounding lug is provided.

[ ] Designates Metric Conversions

16.0 Accessories-Kits-Parts

- **Drain Pan Over Flow Switch RXHK-A01** is used to detect condensate drain blockage and will shut down the outdoor unit in order to prevent structural damage to the surrounding structures of the air handler.

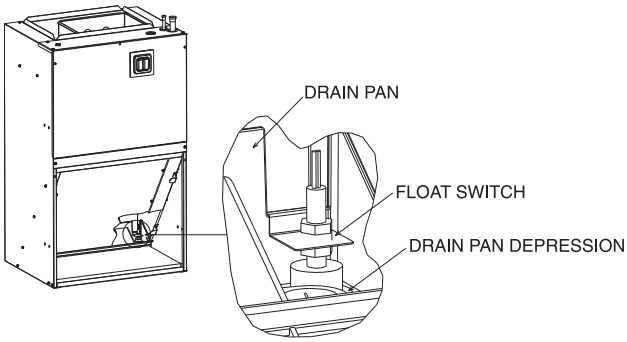

- **Bottom Return Conversion Kit RXHK-** is used to divert the return air from the factory standard front return to a bottom return.

Accessory Number	Indoor Unit
RXHK-B01	DHAL-FR18
	DHAL-FR24
	DHBL-FR24
RXHK-B02	DHAL-FR30
	DHAL-FR36
	DHBL-FR36

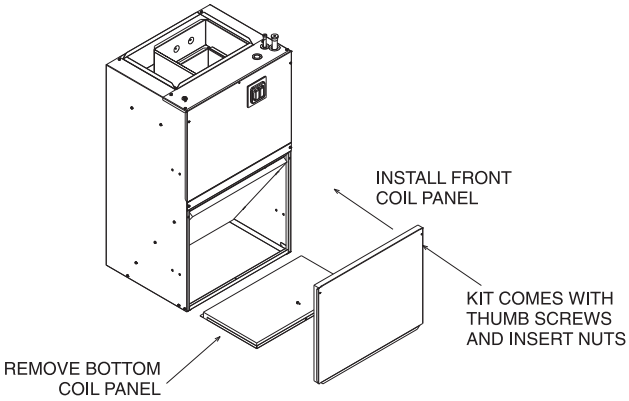

- **Louvered Cabinet Grill RXHK-** is used as decorative grill which covers the return air opening of the front return air handler.

Accessory Number	Indoor Unit
RXHK-C01	DHAL-FR18
	DHAL-FR24
	DHBL-FR24
RXHK-C02	DHAL-FR30
	DHAL-FR36
	DHBL-FR36

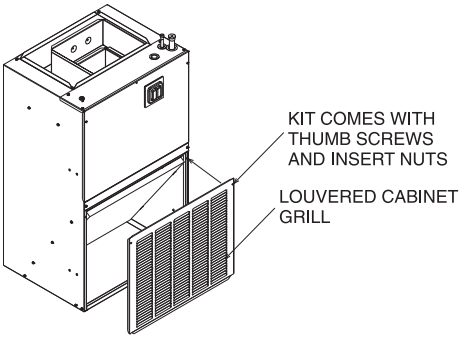

- **Decorative Wall Grill RXHK-D01** is used in applications where the air handler is installed in a closet or interior wall and allows adequate return air back to the unit.

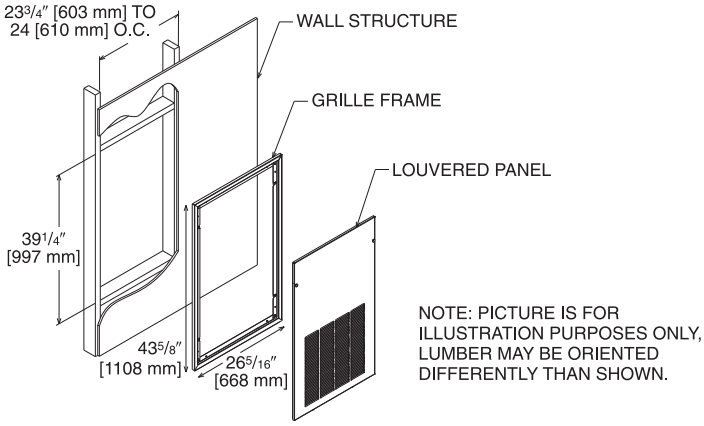

[ ] Designates Metric Conversions

GENERAL TERMS OF LIMITED WARRANTY*

Rheem will furnish a replacement for any part of this product which fails in normal use and service within the applicable periods stated, in accordance with the terms of the limited warranty.

Conditional Parts (Registration Required) .....Ten (10) Years

***For complete details of the Limited and Conditional Warranties, including applicable terms and conditions, contact your local contractor or the Manufacturer for a copy of the product warranty certificate.**

The new degree of comfort.™

In keeping with its policy of continuous progress and product improvement, Rheem reserves the right to make changes without notice.

Rheem Heating, Cooling & Water Heating • P.O. Box 17010
Fort Smith, Arkansas 72917 • www.rheem.com

Rheem Canada Ltd./Ltée • 125 Edgeware Road, Unit 1
Brampton, Ontario • L6Y 0P5

INTEGRATED HOME COMFORT

PRINTED IN U.S.A 12/12 QG FORM NO. H11-545