The new degree of comfort.™

Rheem *Classic® Plus Series Super Quiet 80™* A.F.U.E.† Two-Stage Downflow Gas Furnaces

RGLQ- Series

Models with Input Rates from
50,000 to 150,000 BTU/HR
[15 to 44 kW]
(U.S. & Canadian Models)

†A.F.U.E. (Annual Fuel Utilization Efficiency) calculated in accordance with Department of Energy test procedures.

- The Rheem *Classic® Plus Super Quiet 80™* 2-Stage line of downflow gas furnaces is designed for installation in closets, alcoves, utility rooms, or attics. The design is certified by CSA International.
- Patented heat exchanger, constructed of both stainless and aluminized steel for the maximum in corrosion resistance.
- Low profile “34 inch” [864 mm] design is lighter and easier to handle, and leaves room for optional equipment.
- Left or right side gas and electric inlet connections with quick, simple change.
- Direct spark ignition.
- Integrated control board with humidifier and electronic air cleaner hookups.
- Insulated blower compartment, a two stage gas valve and a specially designed two speed draft inducer motor make it one of the quietest furnaces on the market today.
- Pre-paint galvanized steel cabinet.
- Grab-holes in doors to aid in easy door removal and replacement.
- Compatible with single or two-stage thermostat. (For optimal performance, two-stage thermostat recommended.)
- A variety of cooling coils and plenums designed to use with Rheem *Classic® Plus Super Quiet 80™* 2-Stage gas furnaces are available as optional accessories.

TABLE OF CONTENTS

Standard & Optional Equipment 3
Model Features/Physical Data & Specifications.....4
Model Number Identification 5
Dimensional Data.....6
Blower Performance Data.....7
Accessories.....8
Limited Warranty 9

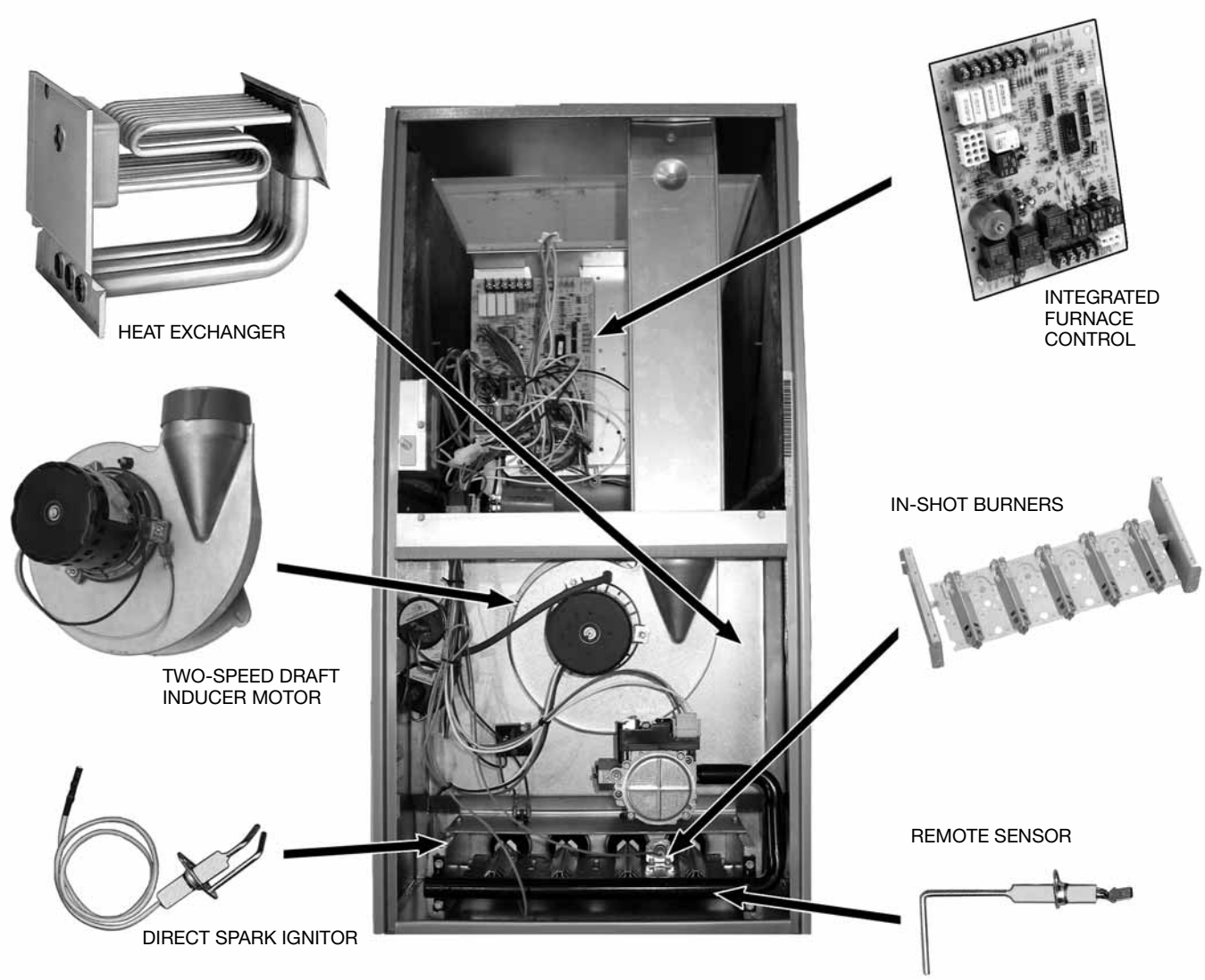

STANDARD EQUIPMENT

Completely assembled and wired; 2 speed induced draft blower; high and low pressure switches; 2 stage redundant main gas control; blower compartment door safety switch; solid state time on/time off blower control; limit control; transformer; direct drive multi-speed blower motor. Furnaces are equipped with cooling/heating relay and transformer (40VA) ready for air conditioning applications. (Please note: a thermostat is not included as standard equipment.) Flame sensor diagnostics; fused-protection (secondary).

NOTE: Furnace is not listed for use with fuels other than natural or L.P. (propane) gas.

The complete terms of limited and other warranties are available at our sales office, or through local installer.

OPTIONAL EQUIPMENT

All models can be converted by a qualified Rheem professional or local service dealer to use L.P. (propane) gas without changing burners. Factory approved kits must be used to convert from natural to L.P. (propane) gas and may be ordered as optional accessories.

For L.P. (propane) operation, refer to Conversion Kit Index Form.

NOTE: For natural and L.P. (propane) gas models, direct spark ignition is 100% lockout type.

WARNING

THIS FURNACE IS NOT APPROVED
OR RECOMMENDED
FOR USE IN MOBILE HOMES

Model Features

- Patented heat exchanger, constructed of both stainless and aluminized steel for the maximum in corrosion resistance.
- Low profile “34 inch” [864 mm] design is lighter and easier to handle, and leaves room for optional equipment.
- Left or right side gas and electric inlet connections with quick, simple change.
- Direct spark ignition.
- Integrated control board with humidifier and electronic air cleaner hookups.
- Insulated blower compartment, a two stage gas valve and a specially designed two speed draft inducer motor make it one of the quietest furnaces on the market today.
- Pre-paint galvanized steel cabinet.
- Grab-holes in doors to aid in easy door removal and replacement.
- Compatible with single or two-stage thermostat. (For optimal performance, two-stage thermostat recommended.)
- A variety of cooling coils and plenums designed to use with Rheem *Classic® Plus Super Quiet 80™* 2-Stage gas furnaces are available as optional accessories.

Physical Data and Specifications

U.S. and Canadian Models

MODEL NUMBERS RGLQ- SERIES	05EAUER 05NAUER	07EAMER 07NAMER	10EAMER 10NAMER	10EBRJR 10NBRJR	12EARJR 12NARJR	15EARJR 15NARJR
High Input–BTU–BTU/Hr [kW] ②	50,000 [15]	75,000 [22]	100,000 [29]	100,000 [29]	125,000 [37]	150,000 [44]
Heating Capacity–BTU/Hr [kW] ①	40,360 [12]	61,020 [18]	81,600 [24]	81,040 [24]	101,750 [29]	121,550 [35]
Low Input–BTU/Hr [kW]	35,000 [10]	52,500 [15]	70,000 [20]	70,000 [20]	87,500 [25]	105,000 [30]
Heating Capacity–BTU/Hr [kW]	28,000 [8]	41,600 [12]	56,000 [16]	56,000 [16]	70,000 [20]	84,000 [24]
Heating–Ext. Static Pressure [kPa]	.10 [.025]	.12 [.029]	.15 [.037]	.15 [.037]	.20 [.05]	.20 [.05]
Blower (D x W) [mm]	11 x 6 [279 x 152]	11 x 7 [279 x 178]	11 x 7 [279 x 178]	11 x 10 [279 x 254]	11 x 10 [279 x 254]	11 x 10 [279 x 254]
Motor H.P.–[W] Speeds–Type	1/2 [373] 4-PSC	1/2 [373] 4-PSC	1/2 [373] 4-PSC	3/4 [559] 4-PSC	3/4 [559] 4-PSC	3/4 [559] 4-PSC
Motor Full Load Amps	6.8	7.1	7.1	9.5	9.5	9.5
Heating Speed–High Fire	MED-LOW	MED-HIGH	MED-HIGH	MED-HIGH	MED-HIGH	MED-HIGH
Heating Speed–Low Fire	LOW	MED-LOW	LOW	LOW	LOW	LOW
Cooling Speed	HIGH	HIGH	HIGH	HIGH	HIGH	HIGH
Cooling CFM @ .5" [kPa] E.S.P. (Nominal) [L/s]	1200 [566]	1200 [566]	1200 [566]	2000 [944]	2000 [944]	2000 [944]
Max. E.S.P. (In. W.C.) [kPa]	0.5 [.12]	0.5 [.12]	0.5 [.12]	0.5 [.12]	0.5 [.12]	0.5 [.12]
Temperature Rise Range °F [°C] High Input	25-55 [13.9-30.6]	35-65 [19.4-36.1]	45-75 [25.0-41.7]	30-60 [16.7-33.3]	35-65 [19.4-36.1]	50-80 [27.8-44.4]
Temperature Rise Range °F [°C] Low Input	20-50 [11.1-27.8]	30-60 [16.7-33.0]	20-50 [11.1-27.8]	35-65 [19.4-36.1]	25-55 [13.9-30.6]	30-60 [16.7-33.3]
Max. Outlet Air Temp. °F [°C]	155 [68.3]	165 [78.3]	180 [82.2]	180 [82.2]	180 [82.2]	190 [87.7]
Standard Filter–In. [mm]	(1) 14 x 20 [356 x 508]	(2) 12 x 20 [306 x 508]	(2) 12 x 20 [306 x 508]	(2) 14 x 20 [356 x 508]	(2) 14 x 20 [356 x 508]	(2) 14 x 20 [356 x 508]
Approx. Shipping Weight (Lbs.) [kg]	85 [39]	105 [48]	115 [52]	120 [54]	140 [63]	150 [68]
AFUE ①	80.0%	80.0%	80.0%	80.0%	80.0%	80.0%

NOTES: All models are 115V, 60HZ, 1Ø. Gas connection size for all models is 1/2" [12.7 mm] N.P.T.
① In accordance with D.O.E. test procedures.
② See Conversion Kit Index for high altitude derate in U.S. applications. For Canadian applications, reference the furnace installation instructions.

Model Number Identification—Downflow Models

R	G	L	Q	—	07E	A	M	E	R
Rheem	Gas Furnace	Downflow	Design Series		Heating Input Designation	Variations	Blower Designation	Heating & Cooling Designation	Fuel Type

Electric Ignition	Electric Ignition–NO_x Models	Input BTU/HR
05E	05N	50,000 [15 kW]
07E	07N	75,000 [22 kW]
10E	10N	100,000 [29 kW]
12E	12N	125,000 [37 kW]
15E	15N	150,000 [44 kW]

A = Std. Cabinet
B = Wide Cabinet

U = 11 x 6 [279 x 152 mm]
M = 11 x 7 [279 x 178 mm]
R = 11 x 10 [279 x 254 mm]

E = 1100-1330 CFM [519-628 L/s]
J = 1800-2075 CFM [850-979 L/s]

R = Natural Gas, U.S. and Canadian Standard Furnace

[ ] Designates Metric Conversions

Downflow Dimensions

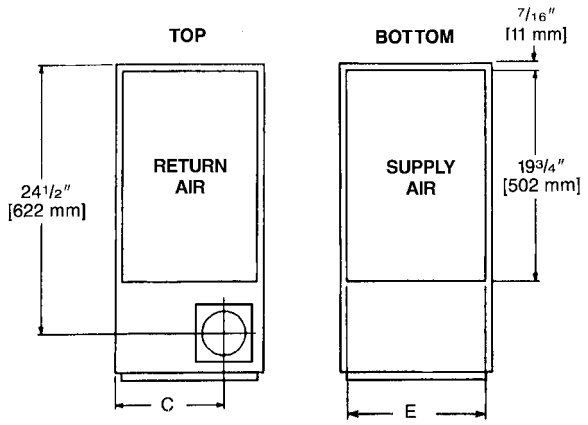

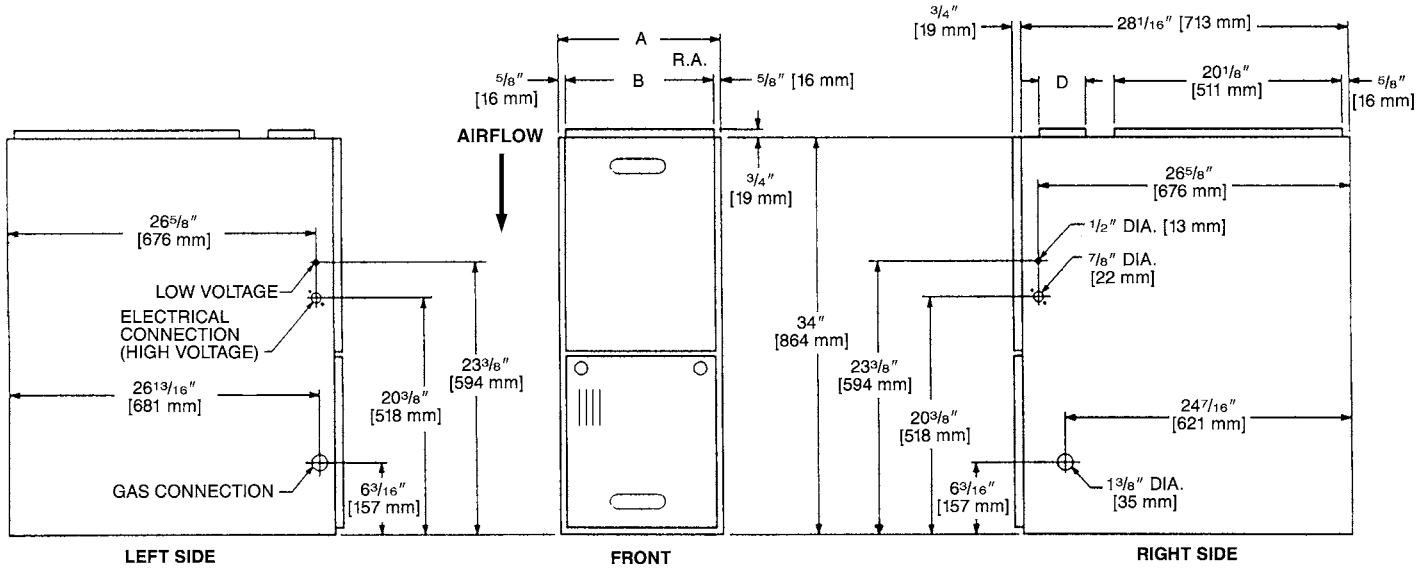

Dimensions and Clearance to Combustible Material (inches) [mm]

MODEL RGLQ-	A	B	C	D	E	REDUCED CLEARANCES (IN.) [mm]						
						LEFT SIDE	RIGHT SIDE	BACK	TOP	FRONT	VENT	SHIP. WGTS. (LBS.) [kg]
05	14 [356]	12 27/32 [326]	10 3/8 [264]	①	13 1/8 [333]	0	4 [102] ②	0	1 [25]	3 [76]	6 [152] ③	85 [38.6]
07	17 1/2 [445]	16 11/32 [415]	12 1/8 [308]	①	16 5/8 [422]	0	3 [76] ②	0	1 [25]	3 [76]	6 [152] ③	105 [47.6]
10 (A)	17 1/2 [445]	16 11/32 [415]	12 1/8 [308]	①	16 5/8 [422]	0	3 [76] ②	0	1 [25]	3 [76]	6 [152] ③	115 [52.2]
10 (B)	21 [533]	19 27/32 [504]	13 7/8 [352]	①	20 1/8 [511]	0	0	0	1 [25]	3 [76]	6 [152] ③	120 [54.4]
12	24 1/2 [622]	23 11/32 [593]	15 5/8 [397]	①	23 5/8 [600]	0	0	0	1 [25]	3 [76]	6 [152] ③	140 [63.5]
15	24 1/2 [622]	23 11/32 [593]	15 5/8 [397]	①	23 5/8 [600]	0	0	0	1 [25]	3 [76]	6 [152] ③	150 [68]

NOTES: ① May require a 3" [76 mm] to 4" [102 mm] or 3" [76 mm] to 5" [127 mm] adapter.
② May be 0" [0 mm] with type B vent.
③ May be 1" [25 mm] with type B vent.
Furnaces must be vented in accordance with the National Fuel Gas Code, ANSI Z223.1 and/or Can/CGA-B149 Installation Codes and in accordance with local codes.

[ ] Designates Metric Conversions

Blower Performance Data—Downflow Models

MODEL NUMBER RGLQ-SERIES	BLOWER SIZE [mm]	MOTOR H.P. [W]	BLOWER SPEED	CFM [L/s] AIR DELIVERY EXTERNAL STATIC PRESSURE INCHES [kPa] WATER COLUMN						
				.1 [.02]	.2 [.05]	.3 [.07]	.4 [.10]	.5 [.12]	.6 [.15]	.7 [.17]
05*AUER	11 x 6 [279 x 152]	1/2 [373]	LOW	655 [309]	630 [297]	600 [283]	565 [266]	532 [251]	500 [236]	467 [220]
			MED-LO	975 [460]	943 [445]	915 [432]	886 [418]	852 [402]	813 [383]	770 [363]
			MED-HI	180 [557]	1140 [538]	1105 [521]	1067 [503]	1027 [484]	980 [462]	924 [436]
			HIGH	1335 [630]	1290 [608]	1250 [590]	1202 [567]	1157 [546]	1110 [524]	1060 [500]
07*AMER	11 x 7 [279 x 178]	1/2 [373]	LOW ①	910 [429]	887 [418]	863 [407]	839 [396]	814 [384]	776 [366]	738 [348]
			MED-LO	1074 [507]	1054 [497]	1034 [488]	1007 [475]	979 [462]	944 [455]	908 [428]
			MED-HI	1229 [580]	1207 [569]	1184 [558]	1159 [547]	1134 [535]	1099 [518]	1063 [501]
			HIGH	1409 [665]	1385 [653]	1361 [642]	1329 [627]	1297 [612]	1260 [594]	1223 [577]
10*AMER	11 x 7 [279 x 178]	1/2 [373]	LOW	895 [422]	874 [412]	852 [402]	825 [389]	798 [376]	766 [362]	734 [346]
			MED-LO	1052 [496]	1033 [487]	1013 [478]	991 [467]	968 [457]	930 [439]	891 [420]
			MED-HI	1238 [584]	1217 [574]	1196 [564]	1169 [551]	1143 [539]	1094 [516]	1044 [492]
			HIGH	1383 [652]	1366 [644]	1348 [636]	1317 [621]	1286 [607]	1245 [587]	1203 [567]
10*BRJR	11 x 10 [279 x 254]	3/4 [559]	LOW	1374 [648]	1356 [640]	1339 [632]	1323 [624]	1286 [607]	1249 [589]	1212 [572]
			MED-LO	1709 [806]	1686 [795]	1663 [784]	1635 [771]	1607 [758]	1562 [737]	1516 [715]
			MED-HI	2132 [1006]	2085 [984]	2038 [961]	1988 [938]	1937 [914]	1882 [888]	1827 [862]
			HIGH	2362 [1114]	2300 [1085]	2237 [1055]	2173 [1025]	2108 [994]	2036 [960]	1964 [926]
12*ARJR	11 x 10 [279 x 254]	3/4 [559]	LOW	1315 [620]	1292 [609]	1269 [599]	1250 [590]	1231 [581]	1194 [563]	1157 [546]
			MED-LO	1618 [763]	1597 [753]	1576 [743]	1552 [732]	1528 [721]	1486 [701]	1443 [681]
			MED-HI	2065 [974]	2025 [956]	1984 [936]	1938 [915]	1891 [892]	1824 [861]	1756 [829]
			HIGH	2275 [1074]	2219 [1047]	2163 [1021]	2103 [992]	2042 [964]	1982 [935]	1921 [907]
15*ARJR	11 x 10 [279 x 254]	3/4 [559]	LOW	1300 [614]	1280 [604]	1230 [580]	1205 [569]	1170 [552]	1115 [526]	1030 [486]
			MED-LO	1675 [791]	1650 [779]	1620 [765]	1570 [741]	1545 [729]	1485 [701]	1425 [673]
			MED-HI	2105 [993]	2075 [979]	2035 [960]	1990 [939]	1955 [923]	1900 [897]	1815 [857]
			HIGH	—	2340 [1104]	2290 [1081]	2215 [1045]	2145 [1012]	2080 [982]	1995 [942]

NOTES: ① Not to be used as a low stage heating speed.
Data compiled with factory filters installed.
See Form Number C11-211 for "N" Coil Data.
Factory rated to 0.5" W.C.
*E = Standard
N = NOx Models

[ ] Designates Metric Conversions

DOWNFLOW ACCESSORIES

DOWNFLOW WARNING: Unit design is certified for installation on non-combustible floor. A special factory supplied combustible floor sub-base is required when installing on a combustible floor. Failure to install the sub-base may result in fire, property damage and personal injury.

COMBUSTIBLE FLOOR BASE DIMENSIONS

COMBUSTIBLE FLOOR BASE	USE WITH FURNACE SIZES	A IN. [mm]	B IN. [mm]	C IN. [mm]
RXGC-B14	RGLQ-05	14 1/2 [368]	13 1/4 [337]	11 1/4 [286]
RXGC-B17	RGLQ-07, RGLQ-10(-)A	18 [457]	16 3/4 [425]	14 3/4 [451]
RXGC-B21	RGLQ-10(-)B	21 1/2 [546]	20 1/4 [514]	18 1/4 [464]
RXGC-B24	RGLQ-12, RGLQ-15	25 [635]	23 3/4 [603]	21 3/4 [552]

RXPF-F01 and F02

FOSSIL FUEL KIT—is for use with Rheem Heat Pumps and Classic Series warm air furnaces. RXPF-F02 meets TVA requirements.

FOR HIGH ALTITUDES:

HIGH ALTITUDE CONVERSION:

See Installation Instructions for more high altitude information.

CAUTION: Always follow National Fuel Gas Code (NFGC) guidelines when converting furnaces for high altitudes.

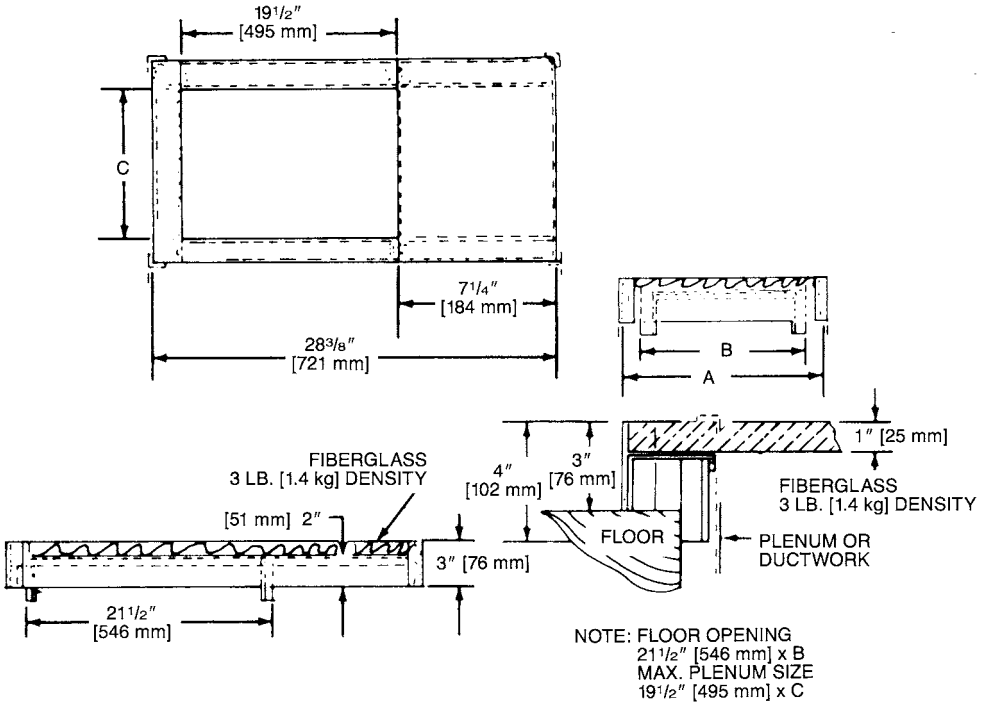

RXGF-CC*

FILTER RACK—Downflow top return mount.

NOTE: Filter racks are shipped without filters.

*Filters available through PROSTOCK®.

DOWNFLOW FILTER SIZES			
FURNACE WIDTH IN. [mm]	INPUT BTUH [kW]	SIZE IN. [mm]	QUANTITY
14 [356]	45 [13.19] & 50 [14.65]	14 [356] x 20 [508]	1
17 1/2 [445]	67 [19.64], 75 [21.98] & 100 [29.31]	12 [305] x 20 [508]	1
21 [533]	100 [29.31]	12 [305] x 20 [508]	2
24 1/2 [622]	125 [36.63] & 150 [44.0]	14 [356] x 20 [508]	2

[ ] Designates Metric Conversions

GENERAL TERMS OF LIMITED WARRANTY*

Rheem will furnish a replacement for any part of this product which fails in normal use and service within the applicable period stated, in accordance with the terms of the limited warranty.

***For complete details of the Limited and Conditional Warranties, including applicable terms and conditions, contact your local contractor or the Manufacturer for a copy of the product warranty certificate.**

Gas Heat Exchanger Limited Warranty .....Twenty (20) Years
Conditional Parts* (Registration Required) .....Ten (10) Years

The new degree of comfort.™

In keeping with its policy of continuous progress and product improvement, Rheem reserves the right to make changes without notice.

Rheem Heating, Cooling & Water Heating • P.O. Box 17010
Fort Smith, Arkansas 72917 • www.rheem.com

Rheem Canada Ltd./Ltée • 125 Edgeware Road, Unit 1
Brampton, Ontario • L6Y 0P5

INTEGRATED HOME COMFORT

PRINTED IN U.S.A 04/12 QG FORM NO. G11-515