The new degree of comfort.™

SUBMITTAL COVER SHEET

PROJECT NAME _____

LOCATION _____

ARCHITECT _____

ENGINEER _____

CONTRACTOR _____

SUBMITTED BY _____ DATE _____

UNIT SUMMARY

Quantity						
Unit Designation						
Model No.						
Total Cooling						
Sensible Cooling						
Air Ent. Evaporator						
Air Lvg. Evaporator						
Heating Input						
Heating Output						
CFM/ESP						
EER/SEER						
Electrical						
Minimum Ampacity						
Min.-Max. Breaker						
Net Unit Weight						
Accessory						
Catalog Form Number						

ACCESSORIES:

NOTES:

PRINTED IN U.S.A 01/12 QG FORM NO. M11-1640

SUBMITTAL SHEET FOR (-)ARL- JEC
2 thru 5 TONS [7.03 thru 17.6 kW] , 16 SEER
HIGH EFFICIENCY TWO-STAGE COOLING CONDENSING UNITS

JOB NAME _____ LOCATION _____

CONTRACTOR _____ ORDER NO. _____

ENGINEER _____ UNIT MODEL NO. _____

SUBMITTED FOR ☐ APPROVAL ☐ RECORD COIL MODEL NO. _____

DATE _____ AIR HANDLER MODEL NO. _____

Equipped with the *Comfort Control² System™*

- Serial communication enabled
- Increased system reliability and efficiency
- 32+ on-board diagnostic and operating codes
- *Active Protection™* with homeowner "Call for Service" alert
- Exclusive Design with dual 7-segment LED display

UNIT DATA

COOLING PERFORMANCE

EFFICIENCY ..... _____ SEER

TOTAL CAPACITY*..... _____ MBH [kW]

SENSIBLE CAPACITY*..... _____ MBH [kW]

OUTDOOR DESIGN TEMP. .... _____ °F [°C] DB

TEMP. OF AIR ENTERING EVAPORATOR COIL..... _____ °F [°C] DB

_____ °F [°C] WB

POWER INPUT REQUIREMENT..... _____ kW

(*uses blower motor heat)

SUPPLY AIR BLOWER PERFORMANCE

TOTAL AIR SUPPLY ..... _____ CFM [L/s]

TOTAL RESISTANCE EXTERNAL TO UNIT..... _____ IWG

BLOWER SPEED ..... _____ RPM

POWER OUTPUT REQUIREMENT .. _____ BHP

MOTOR RATING ..... _____ HP [W]

POWER INPUT REQUIREMENT..... _____ kW

ELECTRICAL DATA

POWER SUPPLY..... _____ Hz

TOTAL UNIT AMPACITY..... _____ AMPS

MINIMUM WIRE SIZE ..... _____ AWG

MAXIMUM OVERCURRENT DEVICE FUSES/HACR BREAKER ..... _____ AMPS

CLEARANCES

ACCESS SIDE	24" [609.6 mm]
AIR INLETS	12" [304.8 mm]
ABOVE UNIT	60" [1524 mm]

FEATURES FOR (-)ARL- JEC SERIES TWO-STAGE CONDENSING UNITS 2 THRU 5 TON [7.03 THRU 17.6 kW]

- Industry's lowest profile design: 33" maximum height.
- Features a 10-year conditional unit replacement warranty and 10-year parts warranty when properly installed with a new Rheem air handler or Rheem indoor coil with a Rheem gas furnace. See product warranty card for additional information.
- Reliable Two-Stage operation for precise temperature control with On-Demand dehumidification feature. When matched with ECM gas furnace or air-handler, the system adjusts airflow to help control humidity for unsurpassed comfort in the cooling mode.
- All controls are accessible by removing one service panel. Removable top grille provides access to the condenser fan motor and condenser coil.
- Attractive, louvered wrap-around jacket protects the coil from yard hazards and weather extremes. Top grille is steel reinforced for extra strength. Cabinet is powder painted for all weather protection.
- For quiet operation and improved efficiency, all models feature highly optimized fan & motor combinations.
- All models meet or exceed a 1000-hour salt spray test per ASTM B117 Standard Practice for Operating Salt Spray Testing Apparatus.

ACCESSORIES

Low Ambient Control (Model No. RXAD-A08) ..... ☐
Compressor Crankcase Heater ..... ☐
Thermostat (See Specification Sheet for details) ..... ☐

c UL US LISTED

ENERGY STAR

AHRI CERTIFIED™ www.ahridirectory.org Unitary Small AC AHRI Standard 210/240 Certification applies only when the complete system is listed with AHRI.

Accredited by the RvA · ABS Quality Evaluations, Inc. · Management System Certification · ANAB ACCREDITED · ISO 9001:2008 · Certificate Number: 30164

"Proper sizing and installation of equipment is critical to achieve optimal performance. Split system air conditioners and heat pumps must be matched with appropriate coil components to meet ENERGY STAR criteria. Ask your Contractor for details or visit www.energystar.gov."

Unit Dimensions

Model Number (-)ARL-	Height "H" (Inches) [mm]	Length "L" (Inches) [mm]	Width "W" (Inches) [mm]
025JEC	23 [584]	44 3/8 [1127]	31 1/2 [800]
038JEC/049JEC/ 061JEC	33 [838]	44 3/8 [1127]	31 1/2 [800]

[ ] Designates Metric Conversions

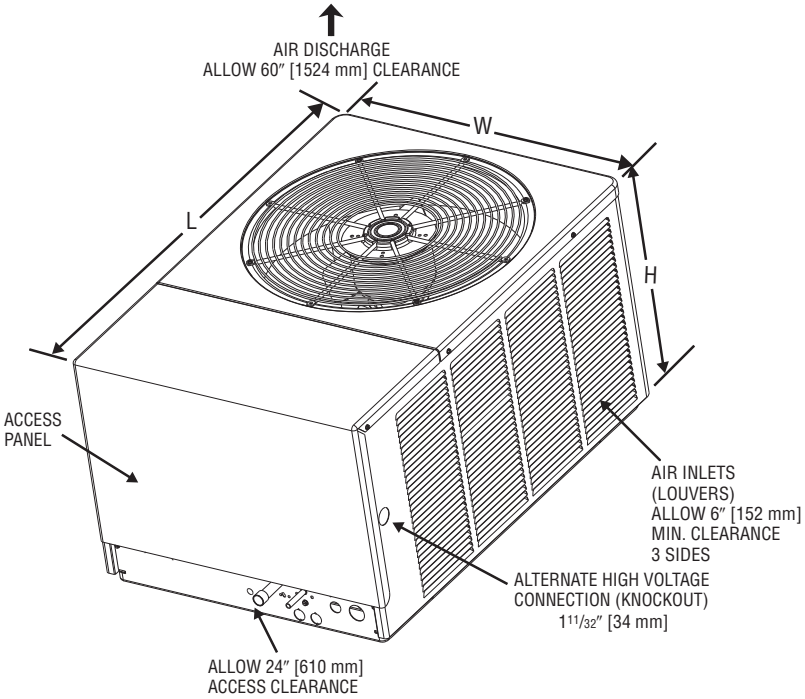

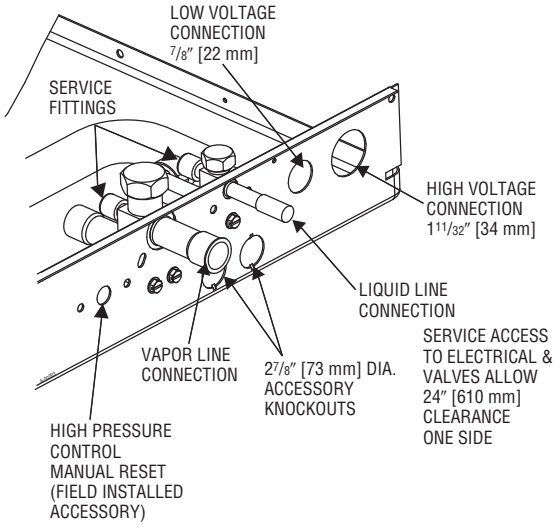

Before proceeding with installation, refer to installation instructions packaged with each model, as well as complying with all Federal, State, Provincial, and Local codes, regulations, and practices.

Rheem Sales Company, Inc.
P.O. Box 17010, Fort Smith, AR 72917

"In keeping with its policy of continuous progress and product improvement, Rheem reserves the right to make changes without notice."

PRINTED IN U.S.A. 7-12 QG FORM NO. X33-1412