The new degree of comfort.™

Hot water supply heaters are designed for applications that require high inputs and large volumes of stored hot water

Features & Benefits

Rheem hot water supply heaters are designed to provide hot water service to a variety of commercial applications when used in conjunction with an appropriately sized storage tank. Choose from 82% thermal efficiency models that range from 1360,000 - 1,826,000 Btu/h and have maximum temperature setting of 180 degrees Fahrenheit. Applications include indoor or outdoor installation and for use with or without a circulating pump.

Reliable Heat Exchanger Design

The all copper heat exchanger is a single bank, straight-through design with a floating return header immune to thermal shock.

Energy Saving Pump Control

The energy saving pump control is an electric device that allows the operator to set the desired time for the pump to run after the water heater shuts off. With the energy saving pump control the water heater pump is programmed to continue running for an optimum period of time in order to absorb the residual heat from the combustion chamber and use it in the system.

Compact Design

The low water heater mass design offers substantial savings in weight and cube over most cast iron, steel tube and storage-type water heaters making it ideal for rooftop installations and in tight quarters.

Spark-to-Pilot (IID)

This system is standard on all models for minimal heat loss.

Glasslined Cast Iron Headers

These headers handle any aggressive water conditions. Models GBBP/GBB136 feature bronze headers.

Warranty

5-Year limited heat exchanger warranty

See Commercial Warranty Certificate for complete information.

Efficiency | These models have been tested according to ANSI test procedures, and meet or exceed the 82% thermal efficiency requirement of current ASHRAE standards (Part of the Federally mandated Energy Policy Act (EPact)). Also exceeds energy efficiency codes of all states.

Safety and Construction | These products are design certified by the CSA: a) As a Hot Water Supply Water Heater equipped with on/off controls for use in conjunction with a storage tank. b) For operation at 180°F. c) To meet all safety and construction requirements of ANSI Z21.10.3.c) For installation on combustible flooring when used with a combustible floor base, and, or e) for alcove installation. ASME construction is standard on all models. **Certified for a 160 PSI Maximum Working Pressure.**

Rheem Hot Water Supply Heaters

Indoor & Outdoor Models
Pump Mounted Models Available
136,000-1,826,000 Btu/h
Natural and LP Gas

Recommended Specifications

Hot Water Supply Heater(s) shall be model _____, manufactured by Rheem, having gas input of _____ Btu/h and recovery rate of _____ GPH at a 100°F temperature rise when tested and certified at _____ thermal efficiency. Water heaters(s) shall have the CSA seal of certification and supplied with a factory installed 125 PSIG ASME pressure relief valve. Water heater(s) shall meet or exceed the thermal efficiency requirements of ASHRAE. Water heater(s) shall be ASME inspected and stamped for 160 psi working pressure complete with manufacturer's data report. Water tube heat exchanger shall be constructed of straight integral copper fin tubes with fins spaced at seven fins per inch. Tube sheets shall be ASME fire box steel. Headers shall be of glasslined cast iron and joined to the copper tubes and tube sheets by means of silicone "O" rings to form a positive seal between the copper tubes and the headers to 1200 PSI hydrostatic pressure. Headers shall be secured to the tube sheets by properly spaced bolts and flange nuts. Heat exchanger shall be readily cleanable from either the right or left sides (or rear) of the water heater by removing header(s), and on the right side, cleanable without removing external piping. Heat exchanger to be explosion proof on the water side. Waterways to be 100% copper and glasslined cast iron to prevent galvanic action within the water heater by positively sealing off water contact between ferrous and non-ferrous metals. Pump, flow switch, and energy saving pump control are to be factory supplied and units over 400,000 Btu/h must have electronic intermittent pilot ignition Water heater to be equipped with remote bulb electric high limit control adjustable to 200°F. Main electric gas valve to be 24 volt with 110/24 volt transformer. Gas pressure regulator to be factory set at 4" W.C. Flame supervision shall be either 60 second thermopilot or 1-4 second electronic shut down. Burners to be raised port and die formed from stainless steel alloy, mounted on a removable drawer, capable of quiet ignition and extinction, and equipped with fixed primary air ports. Models shall be CSA design certified for a minimum efficiency of 82% on indoor and outdoor models.

PRINTED IN U.S.A. 06/13 WP FORM NO. RR102C-6 Rev. 14

SPECIFICATIONS AND DIMENSIONS

REF. TO DWG.	MODEL NUMBER WITH-OUT PUMP	MODEL NUMBER WITH PUMP	STYLE IN-DOOR	STYLE OUT-DOOR	MBTUH NATURAL GAS (X 1000) (INDOOR) INPUT	(INDOOR) OUTPUT	(OUTDOOR) INPUT	(OUTDOOR) OUTPUT	DIMENSIONS (INCHES) WIDTH A	HEIGHT OVERALL B	JACKET HEIGHT C	GAS CONN. G	J	FLUE DIA. K	L	M	N	SHIPPING WEIGHT†† (INDOOR)	(OUTDOOR)
1	GBB136*	GBBP136*	•	•	136.0	112.0	136.0	112.0	14-1/4	45.0	30-1/8	1/2	–	6	9-1/4	10-1/4	3-1/2	195	195
2	GBC186**	GBCP186**	•	•	181.0	148.0	181.0	148.0	18-1/4	40.0	38	3/4	12-1/16	6	–	–	–	191	200
	GBC264**	GBCP264**	•	•	264.0	216.0	264.0	216.0	22-3/8	40.0	38	3/4	11-1/8	7	–	–	–	214	220
	GBC331**	GBCP331**	•	•	334.0	274.0	334.0	274.0	25-3/4	40.0	38	3/4	10-3/4	8	–	–	–	234	240
	GBC399**	GBCP399**	•	•	399.0	327.0	399.0	327.0	29-1/4	40.0	38	3/4	12-1/2	9	–	–	–	253	260
3	GBC512	GBCP512	•	•	511.5	419.4	511.5	419.4	32-3/4	57.0	33	1	–	10	25-3/8	–	–	510	535
	GBC627	GBCP627	•	•	627.0	514.1	627.0	514.1	37-1/2	57.0	33	1	–	12	29-1/2	–	–	520	545
	GBC726	GBCP726	•	•	726.0	595.4	726.0	595.4	41-5/8	57.0	33	1	–	12	34-1/4	–	–	630	685
	GBC825	GBCP825	•	•	825.0	676.5	825.0	676.5	45-3/4	57.0	33	1	–	14	38-1/2	–	–	660	720
4	GBC926	GBCP926	–	•	–	–	926.0	759.3	52-3/8	–	–	1	–	–	–	–	–	–	790
	GBC962	GBCP962	•	–	961.7	788.6	–	–	52-3/8	68-3/4	33-1/2	1	18	14	28	–	–	760	–
	GBC1083	GBCP1083	–	•	–	–	1083.0	888.1	59-1/4	–	–	1	–	–	–	–	–	–	850
	GBC1125	GBCP1125	•	–	1124.7	922.2	–	–	59-1/4	74-1/2	33-1/2	1	25-5/8	16	32	–	–	800	–
	GBC1178	GBCP1178	–	•	–	–	1178.0	966.0	63-5/8	–	–	1	–	–	–	–	–	–	910
	GBC1223	GBCP1223	•	–	1222.5	1002.4	–	–	63-5/8	74-1/2	33-1/2	1	23-5/8	16	32	–	–	860	–
	GBC1287	GBCP1287	–	•	–	–	1287.0	1055.3	68-5/8	–	–	1-1/4	–	–	–	–	–	–	975
	GBC1337	GBCP1337	•	–	1336.6	1096.0	–	–	68-5/8	76-1/2	33-1/2	1-1/4	23-5/8	18	36	–	–	930	–
	GBC1413	GBCP1413	–	•	–	–	1413.0	1158.7	74-7/8	–	–	1-1/4	–	–	–	–	–	–	1065
	GBC1467	GBCP1467	•	–	1467.0	1202.9	–	–	74-7/8	76-1/2	33-1/2	1-1/4	23-5/8	18	36	–	–	1000	–
	GBC1570	GBCP1570	–	•	–	–	1570.0	1287.4	81-1/8	–	–	1-1/4	–	–	–	–	–	–	1120
	GBC1630	GBCP1630	•	–	1630.0	1336.5	–	–	81-1/8	79-1/2	36-1/2	1-1/4	23-5/8	18	36	–	–	1040	–
	GBC1758	GBCP1758	–	•	–	–	1758.0	1441.6	89-3/8	–	–	1-1/4	–	–	–	–	–	–	1150
	GBC1826	GBCP1826	•	–	1825.6	1496.9	–	–	89-3/8	81-1/2	36-1/2	1-1/4	23-5/8	20	40	–	–	1090	–

* Equipped with bronze headers, all other models have glasslined cast iron headers. GBC – cast iron headers. GBB – bronze headers.
†† Subtract 55 lbs. when ordering GBC models.
** 40 ng/J Low NOx models add "N" after model number. Outdoor models add "-O" after model number.
Indicate Natural or LP when ordering.

MBTUH PROPANE GAS†	
Model Size	Multiplier
136-399	Same as natural gas
512-825	.94
926-1826	.92 Indoor .955 Outdoor (input) .92 Outdoor (output)

† Multiplier x Nat. MBTUH = Pro. MBTUH

MIN. CLEARANCES TO COMBUSTIBLE SURF.					
Model Size	Rear	Left Side	Right Side	Top Indoor	Top Outdoor
136	12"	12"	6"	42"	Unobstr.
186-399	12"	12"	12"	39"	Unobstr.
512-825	12"	18"	6"	36"	Unobstr.
926-1826	24"	24"	24"	24"	Unobstr.

For servicing provide 24" minimum unobstructed clearance in front of unit.

ELECTRICAL RATINGS	
Model Size	With Pump
136-399	3.7 amps @ 120V (1/8 hp pump)
331-399	3.6 amps @ 120V (1/6 hp pump)
512-1826	7.2 amps @ 120V (1/2 hp pump)

DRAWING 1

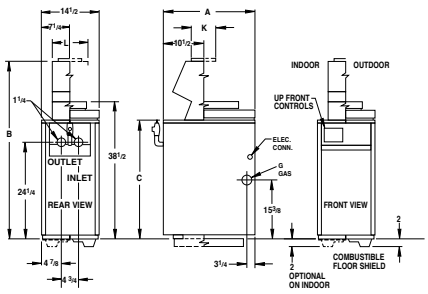

DRAWING 2

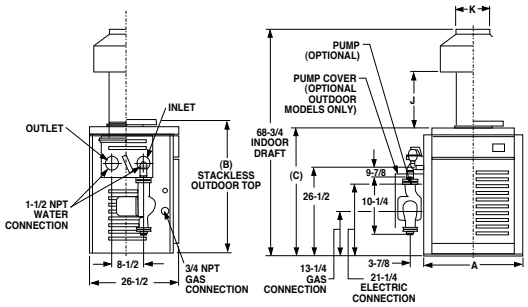

DRAWING 3

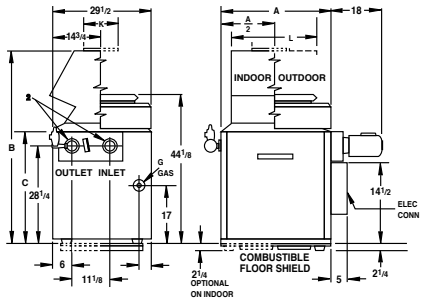

DRAWING 4

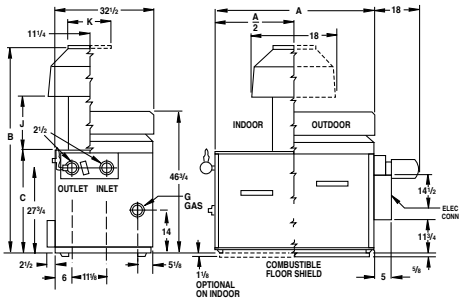

RECOVERY CAPACITIES

MODEL NUMBER		STYLE		INPUT BTU/HR. NATURAL	TEMPERATURE RISE – DEGREES F – GALLONS PER HOUR										
WO/PUMP	W/PUMP	INDOOR	OUTDOOR		40°	50°	60°	70°	80°	90°	100°	110°	120°	130°	140°
GBB136	GBBP136	*	*	136,000	334	268	223	191	167	149	134	122	112	103	96
GBC186	GBCP186	*	*	181,000	445	356	297	255	223	198	178	162	149	137	127
GBC264	GBCP264	*	*	264,000	650	520	433	371	325	289	260	236	217	200	186
GBC331	GBCP331	*	*	334,000	822	658	548	470	411	365	329	299	274	253	235
GBC399	GBCP399	*	*	399,000	982	786	655	561	491	436	393	357	327	302	281
GBC512	GBCP512	*	*	511,500	1259	1,007	839	719	629	559	504	458	420	387	360
GBC627	GBCP627	*	*	627,000	1543	1,234	1,029	882	772	686	617	561	514	475	441
GBC726	GBCP726	*	*	726,000	1787	1429	1191	1021	893	794	715	650	596	550	510
GBC825	GBCP825	*	*	825,000	2030	1624	1354	1160	1015	902	812	738	677	625	580
GBC926	GBCP926		*	926,000	2279	1823	1519	1302	1139	1013	912	829	760	701	651
GBC962	GBCP962	*		961,700	2367	1893	1578	1352	1183	1052	947	861	789	728	676
GBC1083	GBCP1083		*	1,083,000	2665	2132	1777	1523	1333	1185	1066	969	888	820	762
GBC1125	GBCP1125	*		1,124,700	2768	2214	1845	1582	1384	1230	1107	1007	923	852	791
GBC1178	GBCP1178		*	1,178,000	2899	2319	1933	1657	1450	1288	1160	1054	966	892	828
GBC1223	GBCP1223	*		1,222,500	3009	2407	2006	1719	1504	1337	1203	1094	1003	926	860
GBC1287	GBCP1287		*	1,287,000	3167	2534	2112	1810	1584	1408	1267	1152	1056	975	905
GBC1337	GBCP1337	*		1,336,600	3289	2631	2193	1880	1645	1462	1316	1196	1096	1012	940
GBC1413	GBCP1413		*	1,413,000	3477	2782	2318	1987	1739	1546	1391	1265	1159	1070	994
GBC1467	GBCP1467	*		1,467,000	3610	2888	2407	2063	1805	1605	1444	1313	1203	1111	1032
GBC1570	GBCP1570		*	1,570,000	3864	3091	2576	2208	1932	1717	1546	1405	1288	1189	1104
GBC1630	GBCP1630	*		1,630,000	4011	3209	2674	2292	2006	1783	1605	1459	1337	1234	1146
GBC1758	GBCP1758		*	1,758,000	4326	3461	2884	2472	2163	1923	1731	1573	1442	1331	1236
GBC1826	GBCP1826	*		1,825,600	4493	3594	2995	2567	2246	1997	1797	1634	1498	1382	1284

GENERAL FLOW AND PIPING SPECIFICATIONS

MODELS		WATER HARDNESS														
		SOFT					MEDIUM					HARD				
		0-4 GRAINS PER GALLON					5-15 GRAINS PER GALLON					16 & OVER GRAINS PER GALLON				
Indoor	Outdoor	△T	GPM	△P	MPS	SHL	△T	GPM	△P	MPS	SHL	△T	GPM	△P	MPS	SHL
136	136	22	10	3.4	1-1/4	5.09	17	13	5.5	1-1/4	8.2	10	22	14.7	1-1/4	22
186	186	15	20	1.82	1-1/2	4.48	11	26	3	1-1/2	7.5	7	40	6.8	1-1/2	17
264	264	21	20	1.85	1-1/2	4.51	16	26	3.1	1-1/2	7.6	10	42	8.3	1-1/2	18.8
331	331	27	20	1.9	1-1/2	4.56	20	26	3.2	1-1/2	7.7	13	42	8.5	1-1/2	19
399	399	30	22	2.1	1-1/2	5.08	25	26	3.3	1-1/2	7.8	15	43	9	1-1/2	19.5
512	512	20	42	1.8	2	4.4	16	52	2.9	2	7	10	84	6.8	2	16.6
627	627	25	41	1.9	2	4.5	19	54	3.1	2	7.2	11	90	8.5	2	20.4
726	726	29	41	2	2	4.6	20	60	4	2	9.3	13	90	9	2	20.8
825	825	30	45	2.5	2	5.7	20	68	5.2	2	11.7	15	90	9.3	2	21.1
962	926	30	53	3.5	2-1/2	4.9	20	79	7.5	2-1/2	10.5	17	90	10.1	2-1/2	14.3
1125	1083	30	61	5.5	2-1/2	7.5	20	90	11.8	2-1/2	16	20	90	11.8	2-1/2	16
1223	1178	30	67	6.5	2-1/2	8.8	22	90	12	2-1/2	16.2	22	90	12	2-1/2	16.2
1337	1287	30	73	8.4	2-1/2	11	24	90	13.3	2-1/2	17.5	24	90	13.3	2-1/2	17.5
1467	1413	30	80	10.8	2-1/2	14.1	26	90	13.8	2-1/2	18	26	90	13.8	2-1/2	18
1630	1570	30	89	13.7	2-1/2	17.6	29	90	14.8	2-1/2	19	29	90	14.8	2-1/2	19
1826	1758	32	90	15.5	2-1/2	19.7	32	90	15.5	2-1/2	19.7	32	90	15.5	2-1/2	19.7

NOTE: Additional pipe fittings will increase the system head loss. Select a pump based on the water hardness, flow and system head loss. If water heater is more than two stories above the tank, consult the pump manufacturer.

△T – Temperature Rise, Degree F @ GPM Flow
GPM – Gallons per Minute Flow
△P – Pressure Drop, Ft. thru Heat ExchangerMPS
MPS – Minimum Pipe Size, NPT
SHL – System Head Loss

Sizing based on water heater and tank being placed 5 feet apart. The equivalent length of pipe valves and fittings in the system is as follows.

1-1/4" NPT = 65 Ft (136)
1-1/2" NPT = 70 Ft (186-399)
2" NPT = 75 Ft (512-825)
2-1/2" NPT = 80 Ft (926-1826)

Example System

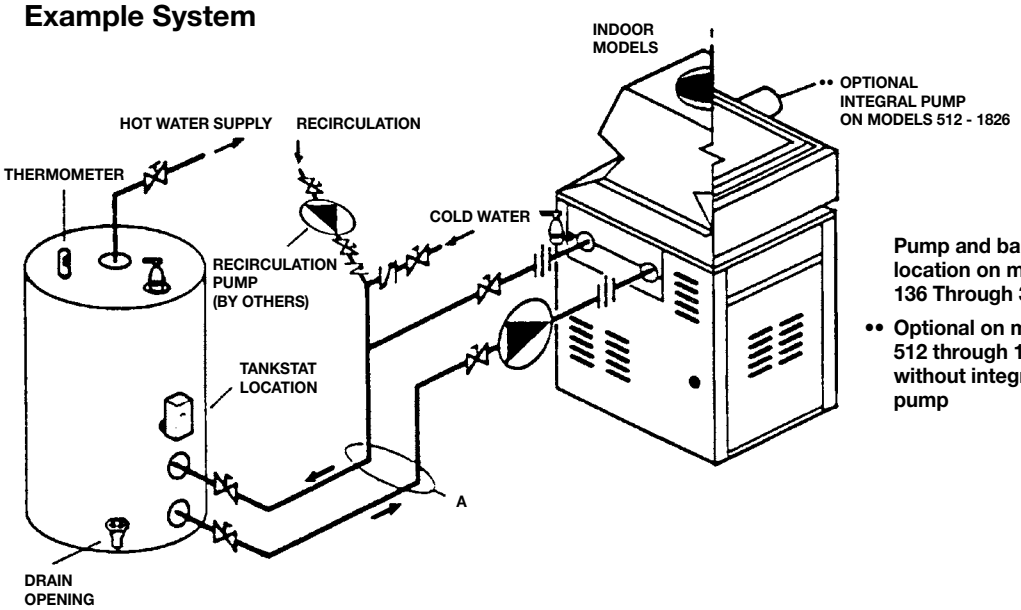

Pump and ball valve location on models 136 Through 399

•• Optional on models 512 through 1826 without integral pump

KEY
PRESSURE RELIEF VALVE
UNION
BALL VALVE
GATE VALVE
CHECK VALVE
PUMP

MINIMUM PIPE SIZE	
MODEL SIZE	DIMENSION A
136	1-1/4"
186-399	1-1/2"
512-825	2"
926-1826	2-1/2"

NOTES:

1. **Plumb swing check valve in gravity closed position.**
2. **Minimum pipe equal to water heater inlet/outlet connection size between water heater and tank(s)**
3. **Pipe all relief valves to drain, or as local codes require.**

Water heater shown represents various models. Because models will vary in draft hood design and size, see specific water heater information for details.

Guaranteed 80% draw without temperature drop, using Rheem water heaters, tanks, sizing tables and hook-up data.

JACKET INSULATED STORAGE TANKS (All dimensions shown in inches)

MODEL	CAPACITY GALLONS	OVERALL HEIGHT	DIAMETER	CONNECTION HOT OUTLET	CONNECTIONS CIRCULATING LINE	RELIEF VALVE CONNECTION	APPROX. SHIPPING WEIGHT (LBS.)	
							STANDARD	ASME
ST80(A)	80	58-5/16	24-7/16	2	2	1	220	260
ST120(A)	115	59-1/4	28-1/4	2	2	1	260	340
ST175(A)	175	67-1/4	32-1/4	2-1/2	2-1/2	1	600	600
ST200A	200	79-1/2	34	2-1/2	2-1/2	1	N/A	872
ST260A	257	95-1/2	34	2	3	1-1/4	N/A	1108
ST320A	318	84-1/2	40	2	3	1-1/4	N/A	1290
ST430A	432	84-1/2	46	2	3	1-1/4	N/A	1626
ST500A	504	94-1/2	46	2	3	1-1/4	N/A	1765
ST750A	752	107-1/2	54	2	3	1-1/4	N/A	2330
ST950A	940	131-1/2	54	2	3	1-1/4	N/A	3010

These storage tanks meet standby loss requirements of ASHRAE 90.1b-1992.
(A) ASME code constructed tanks available as an option.
Consult specification sheets RR102C-3 and RR102C-3LT for complete details.

In keeping with its policy of continuous progress and product improvement, Rheem reserves the right to make changes without notice.

Rheem Water Heating • 101 Bell Road
Montgomery, Alabama 36117-4305 • www.rheem.com

PRINTED IN U.S.A. 06/13 WP FORM NO. RR102C-6 Rev. 14