The new degree of comfort.™

Rheem *Value Series* Heat Pumps

13P(-)L Series

Efficiencies up to 14.5 SEER/12 EER
Nominal Sizes 1.5-5 Ton [5.28 to 17.6 kW]
Cooling Capacities 16.6 to 58 kBTU
[4.86 to 17.0 kW]

"Proper sizing and installation of equipment is critical to achieve optimal performance. Ask your Contractor for details or visit www.energystar.gov."

- Outdoor heat pump designed for ground level or rooftop installations. These units offer comfort and dependability for single, multi-family and light commercial applications.
- Painted louvered steel cabinet
- Easily accessible control box
- Condenser coils constructed with copper tubing and enhanced aluminum fins.
- Grille/Motor mount for quiet fan operation
- Filter Drier (shipped – not installed)

TABLE OF CONTENTS

Model Features 3
Model Number Identification 4
Accessories.....4
Scroll Compressor 4
Performance Data 5-14
Electrical & Physical Data 15
Unit Dimensions.....16
Refrigerant Line Size Information 17
Limited Warranty 18

Model Features:

- Coils constructed with copper tubing and enhanced aluminum fins.
- Includes factory installed low pressure control.
- Strong, attractive cabinet—louvered design protects the coil from damage.
- Expansion Valves with Internal Check Valve—Provides for quieter refrigerant metering.
- Demand Defrost Control
- Non-Cycling Reversing Valve
- Hot Gas Muffler
- Service Valves
- Grille/motor mount for quiet fan operation.
- Easily accessible control box.
- Bi-Directional Filter Drier (shipped – not installed)
- Certified and rated under AHRI Standard 240.
- U.L listed.

Model Number Identification

13	P	J	L	18	A	01
13 SEER	P = HEAT PUMP	VOLTAGE	L = R-410A	NOMINAL COOLING CAPACITY	CABINET	RHEEM VALUE SERIES
		J = 208-230V 1 PH, 60 Hz C = 200/230V 3 PH, 60 Hz D = 460V 3 PH, 60 Hz Y = 575V 3 PH, 60 Hz		18 = 18,000 BTU/HR [5.28 kW] 24 = 24,000 BTU/HR [7.03 kW] 30 = 30,000 BTU/HR [8.79 kW] 36 = 36,000 BTU/HR [10.55 kW] 42 = 42,000 BTU/HR [12.31 kW] 48 = 48,000 BTU/HR [14.07 kW] 60 = 60,000 BTU/HR [17.58 kW]	A = FULL METAL JACKET	

Accessories

- Heat Pump Thermostat Warning Light Kit (Model No. RXPX-D01)
- Low Ambient Control (Model No. RXAD-A08)
- Outdoor Thermostats (Model No. RXPT-A01, A02, A03 or A04)
- Heat Pump Monitor (Model No. RXPM-B01)
- Thermostats and Subbases (Available through the PROSTOCK® department)
- Compressor Time Delay Control (Model No. RXMD-B01)
- Blower Time Delay Control (Model No. RXMD-C04) RXMD-C04 is not required if the outdoor unit is matched with a Rheem Value Series furnace or air handler, or if the furnace or air handler used has a blower off time delay built-in.
- Sound Enclosure*
- High Pressure Control (Model No. RXAB-A07)
- Start Components*

Thermostats

200-Series *
Programmable

300-Series *
Deluxe Programmable

400-Series *
Special Applications/ Programmable

500-Series *
Communicating/ Programmable

Brand		Descripter (3 Characters)	Series (3 Characters)	System (2 Characters)	Type (2 Characters)
RHC	**-**	**TST**	**213**	**UN**	**MS**
RHC=Rheem		TST=Thermostat	200=Programmable 300=Deluxe Programmable 400=Special Applications/ Programmable 500=Communicating/ Programmable	GE=Gas/Electric UN=Universal (AC/HP/GE) MD=Modulating Furnace DF=Dual Fuel CM=Communicating	SS=Single-Stage MS=Multi-Stage

** Photos are representative. Actual models may vary.*

For detailed thermostat match-up information, see specification sheet form number T11-001.

Scroll® Compressor

The reliable scroll compressor is the key to efficiency for this Rheem model. It's the latest in high-efficiency compressor technology. The advanced scroll compressor offers low noise and vibration characteristics and features tolerance to liquid refrigerant and system contamination. The scroll compressor also has low start torque, reducing start problems in the field. And its unique design enables heat pumps to perform efficiently and quietly.

[ ] Designates Metric Conversions

Performance Data @ AHRI Standard Conditions

Model Numbers		AHRI Cooling Performance							AHRI Heating Performance (70°F [21°C] Indoor)				
		80°F [26.5°C] DB/67°F [19.5°C] WB Indoor Air 95°F [35°C] DB Outdoor Air							Outdoor Air 47°F [8.5°C] DB/ 43°F [6°C] WB DOE High Temp.		Outdoor Air 17°F [–8.5°C] DB/ 15°F [–9.5°C] WB DOE Low Temp.		DOE Region IV HSPF
Outdoor Unit 13P(-)L	Indoor Coil and/or Air Handler	Total Capacity BTU/H [kW]	Net Sens. BTU/H [kW]	Net Latent BTU/H [kW]	EER	SEER	Snd. Rate dB	Indoor CFM [L/s]	BTU/H [kW]	COP	BTU/H [kW]	COP	
Rev. 5/17/12	RHSL-HM1817(RCSL-H*2417) ①	18,900 [5.5]	13,350 [3.9]	5,550 [1.6]	11.00	13.00	76	600 [283]	16,900 [5.0]	3.42	8,700 [2.5]	2.18	7.70
	RHAL-FR18P	18,500 [5.4]	14,150 [4.1]	4,350 [1.3]	11.00	13.00	76	600 [283]	16,700 [4.9]	3.48	10,400 [3.0]	2.26	7.70
	RHBL-FR24T	18,500 [5.4]	14,150 [4.1]	4,350 [1.3]	11.50	14.00	76	600 [283]	16,400 [4.8]	3.60	10,100 [3.0]	2.32	8.20
	RCFL-H*2414	18,200 [5.3]	13,050 [3.8]	5,150 [1.5]	11.00	13.00	76	600 [283]	17,000 [5.0]	3.36	8,800 [2.6]	2.08	7.70
	RCFL-H*2417	18,200 [5.3]	13,050 [3.8]	5,150 [1.5]	11.00	13.00	76	600 [283]	17,000 [5.0]	3.36	8,800 [2.6]	2.08	7.70
	RCFL-H*2417(RGFE-06?MCK?)	19,300 [5.7]	13,650 [4.0]	5,650 [1.7]	11.50	14.00	76	575 [271]	17,500 [5.1]	3.62	10,800 [3.2]	2.36	8.20
	RCFL-H*2417(RGFE-07?MCK?)	19,300 [5.7]	13,650 [4.0]	5,650 [1.7]	11.50	14.00	76	600 [283]	17,500 [5.1]	3.62	10,800 [3.2]	2.36	8.20
	RCFL-H*2417(RGFG-06?MCK?)	19,300 [5.7]	13,600 [4.0]	5,700 [1.7]	12.00	14.50	76	575 [271]	17,500 [5.1]	3.62	10,800 [3.2]	2.36	8.20
	RCFL-H*2417(RGFG-07?MCK?)	19,200 [5.6]	13,600 [4.0]	5,600 [1.6]	11.50	14.00	76	600 [283]	17,600 [5.2]	3.54	10,900 [3.2]	2.34	8.20
	RCFL-H*2417(RGGE-06?MCK?)	19,300 [5.7]	13,650 [4.0]	5,650 [1.7]	11.50	14.00	76	625 [295]	17,500 [5.1]	3.62	10,800 [3.2]	2.38	8.20
	RCFL-H*2417(RGGE-07?MCK?)	19,300 [5.7]	13,650 [4.0]	5,650 [1.7]	12.00	14.50	76	575 [271]	17,500 [5.1]	3.64	10,800 [3.2]	2.38	8.20
	RCFL-H*2417(RGJF-06?MCK?)	19,300 [5.7]	13,650 [4.0]	5,650 [1.7]	11.50	14.00	76	625 [295]	17,500 [5.1]	3.62	10,800 [3.2]	2.38	8.20
18 (PJL)	RCFL-H*2417(RGJF-07?MCK?)	19,300 [5.7]	13,650 [4.0]	5,650 [1.7]	12.00	14.50	76	575 [271]	17,500 [5.1]	3.64	10,800 [3.2]	2.38	8.20
	RCFL-H*2417(RGLE-07?AMK?)	19,300 [5.7]	13,650 [4.0]	5,650 [1.7]	12.00	14.50	76	600 [283]	17,500 [5.1]	3.64	10,800 [3.2]	2.38	8.20
	RCFL-H*2417(RGLT-07?AMK?)	19,700 [5.8]	14,150 [4.1]	5,550 [1.6]	12.00	14.50	76	675 [319]	17,500 [5.1]	3.62	10,800 [3.2]	2.36	8.20
	RCFL-H*2417(RGPE-05?BMK?)	19,300 [5.7]	13,650 [4.0]	5,650 [1.7]	11.50	14.00	76	575 [271]	17,500 [5.1]	3.62	10,800 [3.2]	2.38	8.20
	RCFL-H*2417(RGPE-07?AMK?)	19,300 [5.7]	13,650 [4.0]	5,650 [1.7]	12.00	14.50	76	625 [295]	17,500 [5.1]	3.64	10,800 [3.2]	2.38	8.20
	RCFL-H*2417(RGPT-05?BMK?)	19,500 [5.7]	13,950 [4.1]	5,550 [1.6]	11.50	14.00	76	650 [307]	17,600 [5.2]	3.60	10,900 [3.2]	2.36	8.20
	RCFL-H*2417(RGPT-07?AMK?)	19,300 [5.7]	13,650 [4.0]	5,650 [1.7]	11.50	14.00	76	625 [295]	17,500 [5.1]	3.62	10,800 [3.2]	2.36	8.20
	RCFL-H*2417(RGRM-06?MAE?)	18,600 [5.4]	13,450 [3.9]	5,150 [1.5]	11.50	14.00	76	600 [283]	16,500 [4.8]	3.62	8,300 [2.4]	2.22	8.20
	RCFL-H*2417(RGRM-07?MAE?)	18,500 [5.4]	13,400 [3.9]	5,100 [1.5]	11.50	13.50	76	625 [295]	16,600 [4.9]	3.56	8,400 [2.5]	2.18	7.70
	RCFL-H*2417(RGTM-06?MAE?)	19,200 [5.6]	13,550 [4.0]	5,650 [1.7]	11.50	14.00	76	625 [295]	17,500 [5.1]	3.60	10,800 [3.2]	2.36	8.20
	RCFL-H*2417(ROCA-070E03)	19,300 [5.7]	13,650 [4.0]	5,650 [1.7]	12.00	14.50	76	600 [283]	17,500 [5.1]	3.64	10,800 [3.2]	2.38	8.20
	RCFL-H*2417(ROLA-070E03)	19,200 [5.6]	13,550 [4.0]	5,650 [1.7]	11.50	14.00	76	600 [283]	17,500 [5.1]	3.60	10,800 [3.2]	2.36	8.20
	RBHP-17(RCHL-24A2)	17,800 [5.2]	12,900 [3.8]	4,900 [1.4]	11.50	14.00	76	600 [283]	16,500 [4.8]	3.64	9,100 [2.7]	2.44	8.20
	RHLL-HM2417(RCSL-H*2417)	18,900 [5.5]	13,750 [4.0]	5,150 [1.5]	12.00	14.00	76	615 [290]	16,500 [4.8]	3.62	8,300 [2.4]	2.22	8.20
24 (PJL)	RHSL-HM2417(RCSL-H*2417) ①	24,400 [7.1]	17,100 [5.0]	7,200 [2.1]	10.50	13.00	74	800 [378]	22,800 [6.7]	3.50	13,600 [4.0]	2.24	7.70
	RHAL-FR24P	24,000 [7.0]	18,650 [5.5]	5,350 [1.6]	11.00	13.00	74	800 [378]	22,200 [6.5]	3.50	13,400 [3.9]	2.12	7.70

① Highest sales volume tested combination required by D.O.E. test procedures.

[ ] Designates Metric Conversions

Performance Data @ AHRI Standard Conditions

Model Numbers		AHRI Cooling Performance							AHRI Heating Performance (70°F [21°C] Indoor)				
		80°F [26.5°C] DB/67°F [19.5°C] WB Indoor Air 95°F [35°C] DB Outdoor Air							Outdoor Air 47°F [8.5°C] DB/ 43°F [6°C] WB DOE High Temp.		Outdoor Air 17°F [–8.5°C] DB/ 15°F [–9.5°C] WB DOE Low Temp.		DOE Region IV HSPF
Outdoor Unit 13P(-)L	Indoor Coil and/or Air Handler	Total Capacity BTU/H [kW]	Net Sens. BTU/H [kW]	Net Latent BTU/H [kW]	EER	SEER	Snd. Rate dB	Indoor CFM [L/s]	BTU/H [kW]	COP	BTU/H [kW]	COP	
Rev. 5/17/12	RHBL-FR24T	24,600 [7.2]	19,850 [5.8]	4,750 [1.4]	11.50	14.00	74	850 [401]	22,000 [6.4]	3.68	13,500 [4.0]	2.36	8.20
	RCFL-H*2414	24,400 [7.1]	17,250 [5.1]	7,150 [2.1]	10.50	13.00	74	800 [378]	22,800 [6.7]	3.44	13,800 [4.0]	2.22	7.70
	RCFL-H*2417	24,400 [7.1]	17,250 [5.1]	7,150 [2.1]	10.50	13.00	74	800 [378]	22,800 [6.7]	3.44	13,800 [4.0]	2.22	7.70
	RCFL-H*2417(RGFE-06?MCK?)	24,600 [7.2]	17,350 [5.1]	7,250 [2.1]	11.00	13.50	74	800 [378]	22,400 [6.6]	3.66	13,200 [3.9]	2.32	8.20
	RCFL-H*2417(RGFE-07?MCK?)	24,600 [7.2]	17,350 [5.1]	7,250 [2.1]	11.00	13.50	74	825 [389]	22,400 [6.6]	3.64	13,200 [3.9]	2.32	8.20
	RCFL-H*2417(RGFG-06?MCK?)	24,600 [7.2]	17,400 [5.1]	7,200 [2.1]	11.50	13.50	74	800 [378]	22,400 [6.6]	3.66	13,200 [3.9]	2.32	8.20
	RCFL-H*2417(RGFG-07?MCK?)	24,600 [7.2]	17,400 [5.1]	7,200 [2.1]	11.50	13.50	74	800 [378]	22,400 [6.6]	3.66	13,200 [3.9]	2.32	8.20
	RCFL-H*2417(RGGE-06?MCK?)	24,600 [7.2]	17,350 [5.1]	7,250 [2.1]	11.50	14.00	74	825 [389]	22,400 [6.6]	3.68	13,100 [3.8]	2.34	8.20
	RCFL-H*2417(RGGE-07?MCK?)	24,600 [7.2]	17,350 [5.1]	7,250 [2.1]	11.50	14.00	74	800 [378]	22,400 [6.6]	3.66	13,200 [3.9]	2.32	8.20
	RCFL-H*2417(RGJF-06?MCK?)	24,600 [7.2]	17,350 [5.1]	7,250 [2.1]	11.50	14.00	74	825 [389]	22,400 [6.6]	3.68	13,100 [3.8]	2.34	8.20
	RCFL-H*2417(RGJF-07?MCK?)	24,600 [7.2]	17,350 [5.1]	7,250 [2.1]	11.50	14.00	74	800 [378]	22,400 [6.6]	3.66	13,200 [3.9]	2.32	8.20
	RCFL-H*2417(RGLE-07?AMK?)	24,600 [7.2]	17,300 [5.1]	7,300 [2.1]	11.50	14.00	74	800 [378]	22,400 [6.6]	3.70	13,100 [3.8]	2.34	8.20
	RCFL-H*2417(RGLT-07?AMK?)	24,800 [7.3]	17,650 [5.2]	7,150 [2.1]	11.50	14.00	74	850 [401]	22,400 [6.6]	3.66	13,200 [3.9]	2.32	8.20
24 (PJL)	RCFL-H*2417(RGPE-05?BMK?)	24,600 [7.2]	17,350 [5.1]	7,250 [2.1]	11.50	14.00	74	800 [378]	22,400 [6.6]	3.68	13,200 [3.9]	2.32	8.20
	RCFL-H*2417(RGPE-07?AMK?)	24,600 [7.2]	17,350 [5.1]	7,250 [2.1]	11.50	14.00	74	825 [389]	22,400 [6.6]	3.68	13,200 [3.9]	2.34	8.20
	RCFL-H*2417(RGPT-05?BMK?)	24,800 [7.3]	17,700 [5.2]	7,100 [2.1]	11.50	13.50	74	850 [401]	22,600 [6.6]	3.62	13,300 [3.9]	2.30	8.20
	RCFL-H*2417(RGPT-07?AMK?)	24,800 [7.3]	17,650 [5.2]	7,150 [2.1]	11.50	14.00	74	850 [401]	22,400 [6.6]	3.64	13,300 [3.9]	2.32	8.20
	RCFL-H*2417(RGRM-04?MAE?)	24,400 [7.1]	17,350 [5.1]	7,050 [2.1]	11.00	13.50	74	800 [378]	22,400 [6.6]	3.60	13,300 [3.9]	2.30	8.20
	RCFL-H*2417(RGRM-06?MAE?)	24,400 [7.1]	17,350 [5.1]	7,050 [2.1]	11.00	13.50	74	825 [389]	22,400 [6.6]	3.60	13,300 [3.9]	2.30	8.20
	RCFL-H*2417(RGRM-07?MAE?)	24,600 [7.2]	17,700 [5.2]	6,900 [2.0]	11.00	13.00	74	850 [401]	22,600 [6.6]	3.56	13,500 [4.0]	2.28	8.20
	RCFL-H*2417(RGTM-06?MAE?)	24,600 [7.2]	17,350 [5.1]	7,250 [2.1]	11.50	13.50	74	825 [389]	22,400 [6.6]	3.64	13,300 [3.9]	2.32	8.20
	RCFL-H*2417(RHWB-04WMX36A)	24,600 [7.2]	17,400 [5.1]	7,200 [2.1]	11.50	14.00	74	825 [389]	21,400 [6.3]	3.50	12,300 [3.6]	2.16	7.70
	RCFL-H*2417(ROCA-070E03)	24,600 [7.2]	17,350 [5.1]	7,250 [2.1]	11.50	14.00	74	800 [378]	22,400 [6.6]	3.68	13,100 [3.8]	2.34	8.20
	RCFL-H*2417(ROCA-070E04)	24,600 [7.2]	17,350 [5.1]	7,250 [2.1]	11.50	14.00	74	800 [378]	22,400 [6.6]	3.68	13,100 [3.8]	2.34	8.20
	RCFL-H*2417(ROLA-070E03)	24,600 [7.2]	17,350 [5.1]	7,250 [2.1]	11.50	14.00	74	800 [378]	22,400 [6.6]	3.68	13,200 [3.9]	2.34	8.20
	RCFL-H*2417(ROLA-070E04)	24,600 [7.2]	17,350 [5.1]	7,250 [2.1]	11.50	14.00	74	800 [378]	22,400 [6.6]	3.68	13,200 [3.9]	2.34	8.20
	RBHP-17(RCHL-24A2)	22,400 [6.6]	15,850 [4.6]	6,550 [1.9]	11.00	13.00	74	800 [378]	22,200 [6.5]	3.60	14,500 [4.2]	2.54	7.70
	RHLL-HM2417(RCSL-H*2417)	24,800 [7.3]	17,650 [5.2]	7,150 [2.1]	11.50	14.00	74	800 [378]	22,200 [6.5]	3.72	13,100 [3.8]	2.36	8.20

① Highest sales volume tested combination required by D.O.E. test procedures.

[ ] Designates Metric Conversions

Performance Data @ AHRI Standard Conditions

Model Numbers		AHRI Cooling Performance							AHRI Heating Performance (70°F [21°C] Indoor)				
		80°F [26.5°C] DB/67°F [19.5°C] WB Indoor Air 95°F [35°C] DB Outdoor Air							Outdoor Air 47°F [8.5°C] DB/ 43°F [6°C] WB DOE High Temp.		Outdoor Air 17°F [–8.5°C] DB/ 15°F [–9.5°C] WB DOE Low Temp.		DOE Region IV HSPF
Outdoor Unit 13P(-)L	Indoor Coil and/or Air Handler	Total Capacity BTU/H [kW]	Net Sens. BTU/H [kW]	Net Latent BTU/H [kW]	EER	SEER	Snd. Rate dB	Indoor CFM [L/s]	BTU/H [kW]	COP	BTU/H [kW]	COP	
Rev. 5/17/12	RHSL-HM3017(RCSL-H*3617) ①	28,600 [8.4]	21,650 [6.3]	6,950 [2.0]	11.00	13.00	73	1,000 [472]	27,800 [8.1]	3.74	15,600 [4.6]	2.52	8.50
	RHAL-FR30P	28,600 [8.4]	22,050 [6.5]	6,550 [1.9]	11.00	13.00	73	1,000 [472]	29,000 [8.5]	3.76	16,000 [4.7]	2.28	7.70
	RHBL-FR36T	28,600 [8.4]	22,050 [6.5]	6,550 [1.9]	11.50	14.00	73	1,025 [484]	28,400 [8.3]	3.92	15,500 [4.5]	2.32	8.20
	RCFL-H*3617	28,400 [8.3]	21,250 [6.2]	7,150 [2.1]	11.00	13.00	73	1,000 [472]	27,400 [8.0]	3.58	15,000 [4.4]	2.36	8.00
	RCFL-H*3617(RGFE-06?MCK?)	28,600 [8.4]	21,650 [6.3]	6,950 [2.0]	11.00	13.00	73	1,000 [472]	27,400 [8.0]	3.62	15,200 [4.5]	2.32	8.20
	RCFL-H*3617(RGFE-07?MCK?)	28,600 [8.4]	21,650 [6.3]	6,950 [2.0]	11.00	13.00	73	1,025 [484]	27,400 [8.0]	3.62	15,300 [4.5]	2.32	8.20
	RCFL-H*3617(RGFG-06?MCK?)	28,600 [8.4]	21,800 [6.4]	6,800 [2.0]	11.00	13.50	73	1,000 [472]	27,400 [8.0]	3.62	15,200 [4.5]	2.32	8.20
	RCFL-H*3617(RGFG-07?MCK?)	28,400 [8.3]	21,200 [6.2]	7,200 [2.1]	11.00	13.50	73	925 [437]	27,200 [8.0]	3.68	15,100 [4.4]	2.36	8.20
	RCFL-H*3617(RGGE-06?MCK?)	28,800 [8.4]	21,800 [6.4]	7,000 [2.1]	11.00	13.50	73	1,025 [484]	27,400 [8.0]	3.66	15,200 [4.5]	2.34	8.20
	RCFL-H*3617(RGGE-07?MCK?)	28,800 [8.4]	21,800 [6.4]	7,000 [2.1]	11.00	13.50	73	1,025 [484]	27,400 [8.0]	3.64	15,200 [4.5]	2.34	8.20
	RCFL-H*3617(RGJF-06?MCK?)	28,800 [8.4]	21,800 [6.4]	7,000 [2.1]	11.00	13.50	73	1,025 [484]	27,400 [8.0]	3.66	15,200 [4.5]	2.34	8.20
	RCFL-H*3617(RGJF-07?MCK?)	28,800 [8.4]	21,800 [6.4]	7,000 [2.1]	11.00	13.50	73	1,025 [484]	27,400 [8.0]	3.64	15,200 [4.5]	2.34	8.20
	RCFL-H*3617(RGLE-07?AMK?)	28,800 [8.4]	21,800 [6.4]	7,000 [2.1]	11.00	13.50	73	1,025 [484]	27,200 [8.0]	3.68	15,100 [4.4]	2.36	8.20
	RCFL-H*3617(RGLT-07?AMK?)	28,600 [8.4]	21,400 [6.3]	7,200 [2.1]	11.50	13.50	73	925 [437]	26,800 [7.9]	3.74	14,600 [4.3]	2.39	8.20
30 (PJL)	RCFL-H*3617(RGPE-05?BMK?)	28,800 [8.4]	21,800 [6.4]	7,000 [2.1]	11.00	13.50	73	975 [460]	27,400 [8.0]	3.66	15,100 [4.4]	2.36	8.20
	RCFL-H*3617(RGPE-07?AMK?)	28,800 [8.4]	21,800 [6.4]	7,000 [2.1]	11.00	13.50	73	1,000 [472]	27,400 [8.0]	3.68	15,100 [4.4]	2.36	8.20
	RCFL-H*3617(RGPT-05?BMK?)	28,400 [8.3]	21,100 [6.2]	7,300 [2.1]	11.00	13.00	73	900 [425]	26,800 [7.9]	3.71	14,700 [4.3]	2.37	8.20
	RCFL-H*3617(RGPT-07?AMK?)	28,600 [8.4]	21,300 [6.2]	7,300 [2.1]	11.50	14.00	73	900 [425]	26,800 [7.9]	3.73	14,700 [4.3]	2.38	8.20
	RCFL-H*3617(RGRM-04?MAE?)	28,400 [8.3]	21,350 [6.3]	7,050 [2.1]	11.00	13.00	73	1,025 [484]	27,200 [8.0]	3.64	14,800 [4.3]	2.40	8.20
	RCFL-H*3617(RGRM-06?MAE?)	28,400 [8.3]	21,350 [6.3]	7,050 [2.1]	11.00	13.00	73	1,000 [472]	27,200 [8.0]	3.66	14,700 [4.3]	2.42	8.20
	RCFL-H*3617(RGRM-07?YBG?)	28,400 [8.3]	21,350 [6.3]	7,050 [2.1]	11.00	13.00	73	975 [460]	27,200 [8.0]	3.64	14,800 [4.3]	2.40	8.20
	RCFL-H*3617(RGTM-06?MAE?)	28,600 [8.4]	21,650 [6.3]	6,950 [2.0]	11.00	13.00	73	1,025 [484]	27,400 [8.0]	3.62	15,200 [4.5]	2.32	8.20
	RCFL-H*3617(RHWB-04WMX36A)	29,000 [8.5]	22,200 [6.5]	6,800 [2.0]	11.50	13.50	73	1,050 [495]	26,200 [7.7]	3.52	14,000 [4.1]	2.18	8.20
	RCFL-H*3617(RHWB-06WMX48A)	29,000 [8.5]	22,000 [6.4]	7,000 [2.1]	11.50	14.00	73	975 [460]	26,000 [7.6]	3.56	13,900 [4.1]	2.20	8.20
	RCFL-H*3617(ROCA-070E03)	28,800 [8.4]	21,800 [6.4]	7,000 [2.1]	11.50	13.50	73	1,000 [472]	27,200 [8.0]	3.70	15,100 [4.4]	2.36	8.20
	RCFL-H*3617(ROCA-070E04)	28,800 [8.4]	21,800 [6.4]	7,000 [2.1]	11.50	13.50	73	1,000 [472]	27,200 [8.0]	3.70	15,100 [4.4]	2.36	8.20
	RCFL-H*3617(ROLA-070E03)	29,000 [8.5]	21,950 [6.4]	7,050 [2.1]	11.50	14.00	73	975 [460]	27,200 [8.0]	3.72	15,000 [4.4]	2.38	8.20
	RCFL-H*3617(ROLA-070E04)	29,000 [8.5]	21,950 [6.4]	7,050 [2.1]	11.50	14.00	73	975 [460]	27,200 [8.0]	3.72	15,000 [4.4]	2.38	8.20

① Highest sales volume tested combination required by D.O.E. test procedures.

[ ] Designates Metric Conversions

Performance Data @ AHRI Standard Conditions

Model Numbers		AHRI Cooling Performance							AHRI Heating Performance (70°F [21°C] Indoor)				
		80°F [26.5°C] DB/67°F [19.5°C] WB Indoor Air 95°F [35°C] DB Outdoor Air							Outdoor Air 47°F [8.5°C] DB/ 43°F [6°C] WB DOE High Temp.		Outdoor Air 17°F [–8.5°C] DB/ 15°F [–9.5°C] WB DOE Low Temp.		DOE Region IV HSPF
Outdoor Unit 13P(-)L	Indoor Coil and/or Air Handler	Total Capacity BTU/H [kW]	Net Sens. BTU/H [kW]	Net Latent BTU/H [kW]	EER	SEER	Snd. Rate dB	Indoor CFM [L/s]	BTU/H [kW]	COP	BTU/H [kW]	COP	
Rev. 5/17/12	RCFL-H*3621	28,400 [8.3]	21,250 [6.2]	7,150 [2.1]	11.00	13.00	73	1,000 [472]	27,400 [8.0]	3.58	15,000 [4.4]	2.36	8.00
	RCFL-H*3621(RGFE-06?MCK?)	28,600 [8.4]	21,650 [6.3]	6,950 [2.0]	11.00	13.50	73	1,000 [472]	27,400 [8.0]	3.64	15,200 [4.5]	2.34	8.20
	RCFL-H*3621(RGFE-07?MCK?)	28,600 [8.4]	21,650 [6.3]	6,950 [2.0]	11.00	13.00	73	1,025 [484]	27,400 [8.0]	3.62	15,200 [4.5]	2.32	8.20
	RCFL-H*3621(RGFE-09?ZCM?)	29,000 [8.5]	21,950 [6.4]	7,050 [2.1]	11.50	14.00	73	975 [460]	27,200 [8.0]	3.72	15,000 [4.4]	2.38	8.20
	RCFL-H*3621(RGFE-10?ZCM?)	28,800 [8.4]	21,800 [6.4]	7,000 [2.1]	11.50	13.50	73	1,000 [472]	27,200 [8.0]	3.72	15,000 [4.4]	2.38	8.20
	RCFL-H*3621(RGFG-06?MCK?)	28,800 [8.4]	21,800 [6.4]	7,000 [2.1]	11.00	13.50	73	1,000 [472]	27,400 [8.0]	3.64	15,200 [4.5]	2.34	8.20
	RCFL-H*3621(RGFG-07?MCK?)	28,400 [8.3]	21,200 [6.2]	7,200 [2.1]	11.50	13.50	73	925 [437]	27,200 [8.0]	3.70	15,000 [4.4]	2.38	8.20
	RCFL-H*3621(RGFG-09?ZCM?)	29,000 [8.5]	22,000 [6.4]	7,000 [2.1]	11.50	14.00	73	975 [460]	27,200 [8.0]	3.72	15,000 [4.4]	2.38	8.20
	RCFL-H*3621(RGFG-10?ZCM?)	28,600 [8.4]	21,200 [6.2]	7,400 [2.2]	11.50	14.00	73	900 [425]	27,000 [7.9]	3.76	14,900 [4.4]	2.40	8.20
	RCFL-H*3621(RGGE-06?MCK?)	28,800 [8.4]	21,800 [6.4]	7,000 [2.1]	11.00	13.50	73	1,025 [484]	27,400 [8.0]	3.66	15,100 [4.4]	2.36	8.20
	RCFL-H*3621(RGGE-07?MCK?)	28,800 [8.4]	21,800 [6.4]	7,000 [2.1]	11.00	13.50	73	1,025 [484]	27,400 [8.0]	3.66	15,200 [4.5]	2.34	8.20
	RCFL-H*3621(RGGE-09?ZCM?)	29,000 [8.5]	21,950 [6.4]	7,050 [2.1]	11.50	14.00	73	1,000 [472]	27,200 [8.0]	3.72	15,000 [4.4]	2.38	8.20
	RCFL-H*3621(RGGE-10?ZCM?)	28,800 [8.4]	21,800 [6.4]	7,000 [2.1]	11.50	14.00	73	1,000 [472]	27,200 [8.0]	3.72	15,000 [4.4]	2.38	8.20
30 (PJL)	RCFL-H*3621(RGJF-06?MCK?)	28,800 [8.4]	21,800 [6.4]	7,000 [2.1]	11.00	13.50	73	1,025 [484]	27,400 [8.0]	3.66	15,100 [4.4]	2.36	8.20
	RCFL-H*3621(RGJF-07?MCK?)	28,800 [8.4]	21,800 [6.4]	7,000 [2.1]	11.00	13.50	73	1,025 [484]	27,400 [8.0]	3.66	15,200 [4.5]	2.34	8.20
	RCFL-H*3621(RGJF-09?ZCM?)	29,000 [8.5]	21,950 [6.4]	7,050 [2.1]	11.50	14.00	73	1,000 [472]	27,200 [8.0]	3.72	15,000 [4.4]	2.38	8.20
	RCFL-H*3621(RGJF-10?ZCM?)	28,800 [8.4]	21,800 [6.4]	7,000 [2.1]	11.50	14.00	73	1,000 [472]	27,200 [8.0]	3.72	15,000 [4.4]	2.38	8.20
	RCFL-H*3621(RGLE-07?AMK?)	28,800 [8.4]	21,800 [6.4]	7,000 [2.1]	11.00	13.50	73	1,025 [484]	27,200 [8.0]	3.70	15,000 [4.4]	2.38	8.20
	RCFL-H*3621(RGLE-07?BRQ?)	29,000 [8.5]	21,950 [6.4]	7,050 [2.1]	11.50	14.00	73	1,025 [484]	27,200 [8.0]	3.74	14,900 [4.4]	2.40	8.20
	RCFL-H*3621(RGLE-10?BRM?)	29,200 [8.6]	22,350 [6.5]	6,850 [2.0]	11.50	14.00	73	1,050 [495]	27,000 [7.9]	3.76	14,900 [4.4]	2.40	8.20
	RCFL-H*3621(RGLR-07?BRQ?)	28,800 [8.4]	21,650 [6.3]	7,150 [2.1]	11.50	14.00	73	1,000 [472]	26,800 [7.9]	3.82	14,100 [4.1]	2.50	8.20
	RCFL-H*3621(RGLT-07?AMK?)	28,800 [8.4]	21,600 [6.3]	7,200 [2.1]	11.50	13.50	73	925 [437]	26,800 [7.9]	3.75	14,600 [4.3]	2.39	8.20
	RCFL-H*3621(RGLT-07?BRQ?)	29,000 [8.5]	21,950 [6.4]	7,050 [2.1]	11.50	14.00	73	975 [460]	27,200 [8.0]	3.76	14,900 [4.4]	2.40	8.20
	RCFL-H*3621(RGLT-10?BRM?)	29,000 [8.5]	21,950 [6.4]	7,050 [2.1]	11.50	14.00	73	975 [460]	27,000 [7.9]	3.76	14,900 [4.4]	2.42	8.20
	RCFL-H*3621(RGPE-05?BMK?)	28,800 [8.4]	21,800 [6.4]	7,000 [2.1]	11.00	13.50	73	975 [460]	27,400 [8.0]	3.68	15,100 [4.4]	2.36	8.20
	RCFL-H*3621(RGPE-07?AMK?)	28,800 [8.4]	21,800 [6.4]	7,000 [2.1]	11.00	13.50	73	1,000 [472]	27,200 [8.0]	3.70	15,000 [4.4]	2.36	8.20
	RCFL-H*3621(RGPE-07?BRQ?)	29,000 [8.5]	21,950 [6.4]	7,050 [2.1]	11.50	14.00	73	1,025 [484]	27,200 [8.0]	3.74	14,900 [4.4]	2.40	8.20
	RCFL-H*3621(RGPE-10?BRM?)	28,600 [8.4]	21,150 [6.2]	7,450 [2.2]	11.50	14.00	73	900 [425]	27,000 [7.9]	3.80	14,700 [4.3]	2.44	8.20

① Highest sales volume tested combination required by D.O.E. test procedures.

[ ] Designates Metric Conversions

Performance Data @ AHRI Standard Conditions

Model Numbers		AHRI Cooling Performance							AHRI Heating Performance (70°F [21°C] Indoor)				
		80°F [26.5°C] DB/67°F [19.5°C] WB Indoor Air 95°F [35°C] DB Outdoor Air							Outdoor Air 47°F [8.5°C] DB/ 43°F [6°C] WB DOE High Temp.		Outdoor Air 17°F [–8.5°C] DB/ 15°F [–9.5°C] WB DOE Low Temp.		DOE Region IV HSPF
Outdoor Unit 13P(-)L	Indoor Coil and/or Air Handler	Total Capacity BTU/H [kW]	Net Sens. BTU/H [kW]	Net Latent BTU/H [kW]	EER	SEER	Snd. Rate dB	Indoor CFM [L/s]	BTU/H [kW]	COP	BTU/H [kW]	COP	
Rev. 5/17/12	RCFL-H*3621(RGPT-05?BMK?)	28,400 [8.3]	21,100 [6.2]	7,300 [2.1]	11.00	13.50	73	900 [425]	26,800 [7.9]	3.71	14,700 [4.3]	2.37	8.20
	RCFL-H*3621(RGPT-07?AMK?)	28,600 [8.4]	21,400 [6.3]	7,200 [2.1]	11.00	13.50	73	925 [437]	26,800 [7.9]	3.73	14,600 [4.3]	2.38	8.20
	RCFL-H*3621(RGPT-07?BRQ?)	29,000 [8.5]	22,000 [6.4]	7,000 [2.1]	11.50	14.00	73	1,000 [472]	26,800 [7.9]	3.74	14,600 [4.3]	2.38	8.20
	RCFL-H*3621(RGPT-10?BRM?)	29,000 [8.5]	21,950 [6.4]	7,050 [2.1]	11.50	14.00	73	975 [460]	27,000 [7.9]	3.76	14,900 [4.4]	2.40	8.20
	RCFL-H*3621(RGRM-04?MAE?)	28,400 [8.3]	21,350 [6.3]	7,050 [2.1]	11.00	13.00	73	1,025 [484]	27,200 [8.0]	3.64	14,800 [4.3]	2.42	8.20
	RCFL-H*3621(RGRM-06?MAE?)	28,400 [8.3]	21,350 [6.3]	7,050 [2.1]	11.00	13.00	73	1,000 [472]	27,000 [7.9]	3.68	14,700 [4.3]	2.44	8.20
	RCFL-H*3621(RGRM-07?YBG?)	28,400 [8.3]	21,350 [6.3]	7,050 [2.1]	11.00	13.00	73	975 [460]	27,200 [8.0]	3.66	14,800 [4.3]	2.42	8.20
	RCFL-H*3621(RGTM-06?MAE?)	28,600 [8.4]	21,650 [6.3]	6,950 [2.0]	11.00	13.50	73	1,025 [484]	27,400 [8.0]	3.64	15,200 [4.5]	2.34	8.20
	RCFL-H*3621(RGTM-07?RBG?)	29,200 [8.6]	22,350 [6.5]	6,850 [2.0]	11.50	14.00	73	1,050 [495]	27,200 [8.0]	3.70	15,000 [4.4]	2.38	8.20
30 (PJL)	RCFL-H*3621(RGTM-09?ZAJ?)	29,000 [8.5]	21,950 [6.4]	7,050 [2.1]	11.50	14.00	73	975 [460]	27,200 [8.0]	3.74	14,900 [4.4]	2.40	8.20
	RCFL-H*3621(RHWB-04WMX36A)	29,000 [8.5]	22,200 [6.5]	6,800 [2.0]	11.50	13.50	73	1,050 [495]	26,200 [7.7]	3.52	14,000 [4.1]	2.18	8.20
	RCFL-H*3621(RHWB-06WMX48A)	29,000 [8.5]	22,000 [6.4]	7,000 [2.1]	11.50	14.00	73	1,000 [472]	26,000 [7.6]	3.56	13,900 [4.1]	2.20	8.20
	RCFL-H*3621(ROCA-070E03)	28,800 [8.4]	21,800 [6.4]	7,000 [2.1]	11.50	13.50	73	1,000 [472]	27,200 [8.0]	3.70	15,000 [4.4]	2.38	8.20
	RCFL-H*3621(ROCA-070E04)	28,800 [8.4]	21,800 [6.4]	7,000 [2.1]	11.50	13.50	73	1,000 [472]	27,200 [8.0]	3.70	15,000 [4.4]	2.38	8.20
	RCFL-H*3621(ROLA-070E03)	29,000 [8.5]	21,950 [6.4]	7,050 [2.1]	11.50	14.00	73	975 [460]	27,200 [8.0]	3.74	14,900 [4.4]	2.40	8.20
	RCFL-H*3621(ROLA-070E04)	29,000 [8.5]	21,950 [6.4]	7,050 [2.1]	11.50	14.00	73	975 [460]	27,200 [8.0]	3.74	14,900 [4.4]	2.40	8.20
	RCFL-H*3621(ROLA-115E05)	29,200 [8.6]	22,350 [6.5]	6,850 [2.0]	11.50	14.00	73	1,050 [495]	27,200 [8.0]	3.70	15,000 [4.4]	2.38	8.20
	RBHP-21(RCHL-36A1)	28,600 [8.4]	21,200 [6.2]	7,400 [2.2]	11.50	14.00	73	1,000 [472]	26,800 [7.9]	3.82	14,500 [4.2]	2.56	8.20
	RHLL-HM3617(RCSL-H*3617)	28,800 [8.4]	21,650 [6.3]	7,150 [2.1]	11.50	14.00	73	1,000 [472]	26,800 [7.9]	3.78	14,400 [4.2]	2.44	9.00
	RHSL-HM3617(RCSL-H*3617) ①	34,400 [10.1]	25,400 [7.4]	9,100 [2.7]	11.00	13.00	75	1,200 [566]	34,600 [10.1]	3.46	22,600 [6.6]	2.38	8.50
	RHAL-FR36T	34,800 [10.2]	26,300 [7.7]	8,500 [2.5]	11.00	13.00	75	1,200 [566]	35,200 [10.3]	3.28	20,400 [6.0]	2.00	7.70
	RHBL-FR36T	34,800 [10.2]	26,300 [7.7]	8,500 [2.5]	11.50	14.00	75	1,150 [543]	34,600 [10.1]	3.50	19,800 [5.8]	2.20	8.20
	RCFL-H*3617	33,400 [9.8]	24,350 [7.1]	9,050 [2.7]	10.50	13.00	75	1,075 [507]	34,400 [10.1]	3.46	22,400 [6.6]	2.40	8.50
36 (PJL) (PCL) (PDL)	RCFL-H*3617(RGGE-06?MCK?)	35,200 [10.3]	26,700 [7.8]	8,500 [2.5]	11.00	13.00	75	1,200 [566]	34,400 [10.1]	3.48	22,400 [6.6]	2.42	8.20
	RCFL-H*3617(RGGE-07?MCK?)	35,200 [10.3]	26,700 [7.8]	8,500 [2.5]	11.00	13.00	75	1,200 [566]	34,600 [10.1]	3.46	22,600 [6.6]	2.40	8.20
	RCFL-H*3617(RGJF-06?MCK?)	35,200 [10.3]	26,700 [7.8]	8,500 [2.5]	11.00	13.00	75	1,200 [566]	34,400 [10.1]	3.48	22,400 [6.6]	2.42	8.20
	RCFL-H*3617(RGJF-07?MCK?)	35,200 [10.3]	26,700 [7.8]	8,500 [2.5]	11.00	13.00	75	1,200 [566]	34,600 [10.1]	3.46	22,600 [6.6]	2.40	8.20
	RCFL-H*3617(RGLE-07?AMK?)	35,400 [10.4]	26,850 [7.9]	8,550 [2.5]	11.00	13.50	75	1,200 [566]	34,400 [10.1]	3.52	22,400 [6.6]	2.44	8.20

① Highest sales volume tested combination required by D.O.E. test procedures.

[ ] Designates Metric Conversions

Performance Data @ AHRI Standard Conditions

Model Numbers		AHRI Cooling Performance							AHRI Heating Performance (70°F [21°C] Indoor)				
		80°F [26.5°C] DB/67°F [19.5°C] WB Indoor Air 95°F [35°C] DB Outdoor Air							Outdoor Air 47°F [8.5°C] DB/ 43°F [6°C] WB DOE High Temp.		Outdoor Air 17°F [–8.5°C] DB/ 15°F [–9.5°C] WB DOE Low Temp.		DOE Region IV HSPF
Outdoor Unit 13P(-)L	Indoor Coil and/or Air Handler	Total Capacity BTU/H [kW]	Net Sens. BTU/H [kW]	Net Latent BTU/H [kW]	EER	SEER	Snd. Rate dB	Indoor CFM [L/s]	BTU/H [kW]	COP	BTU/H [kW]	COP	
Rev. 5/17/12	RCFL-H*3617(RGLT-07?AMK?)	34,800 [10.2]	25,500 [7.5]	9,300 [2.7]	11.50	14.00	75	1,150 [543]	34,000 [10.0]	3.59	21,800 [6.4]	2.47	8.20
	RCFL-H*3617(RGPE-05?BMK?)	35,200 [10.3]	26,700 [7.8]	8,500 [2.5]	11.00	13.00	75	1,200 [566]	34,600 [10.1]	3.48	22,400 [6.6]	2.40	8.20
	RCFL-H*3617(RGPE-07?AMK?)	35,400 [10.4]	27,000 [7.9]	8,400 [2.5]	11.00	13.00	75	1,225 [578]	34,400 [10.1]	3.48	22,400 [6.6]	2.42	8.20
	RCFL-H*3617(RGPT-05?BMK?)	35,000 [10.3]	26,400 [7.7]	8,600 [2.5]	11.00	13.00	75	1,175 [554]	34,600 [10.1]	3.44	22,600 [6.6]	2.40	8.20
	RCFL-H*3617(RGPT-07?AMK?)	35,200 [10.3]	26,550 [7.8]	8,650 [2.5]	11.00	13.00	75	1,175 [554]	34,400 [10.1]	3.48	22,400 [6.6]	2.42	8.20
	RCFL-H*3617(RGRM-06?MAE?)	34,800 [10.2]	26,350 [7.7]	8,450 [2.5]	11.00	13.00	75	1,175 [554]	34,600 [10.1]	3.40	22,600 [6.6]	2.36	8.20
	RCFL-H*3617(RGRM-09?ZAJ?)	35,400 [10.4]	27,150 [8.0]	8,250 [2.4]	11.00	13.00	75	1,225 [578]	34,400 [10.1]	3.48	22,400 [6.6]	2.40	8.20
	RCFL-H*3617(RGRM-10?ZAJ?)	35,000 [10.3]	26,350 [7.7]	8,650 [2.5]	11.00	13.50	75	1,150 [543]	34,200 [10.0]	3.50	22,200 [6.5]	2.42	8.20
	RCFL-H*3617(RGTM-06?MAE?)	34,800 [10.2]	25,650 [7.5]	9,150 [2.7]	11.00	13.50	75	1,075 [507]	34,200 [10.0]	3.58	22,200 [6.5]	2.46	8.20
	RCFL-H*3617(RHWB-04WMX36A)	35,200 [10.3]	25,700 [7.5]	9,500 [2.8]	11.50	13.50	75	1,150 [543]	34,200 [10.0]	3.52	22,000 [6.4]	2.42	8.20
	RCFL-H*3617(RHWB-06WMX48A)	35,000 [10.3]	25,500 [7.5]	9,500 [2.8]	11.50	13.50	75	1,150 [543]	34,200 [10.0]	3.50	22,200 [6.5]	2.40	8.20
	RCFL-H*3617(ROCA-070E03)	35,200 [10.3]	26,650 [7.8]	8,550 [2.5]	11.00	13.50	75	1,200 [566]	34,400 [10.1]	3.50	22,400 [6.6]	2.42	8.20
	RCFL-H*3617(ROCA-070E04)	35,200 [10.3]	26,650 [7.8]	8,550 [2.5]	11.00	13.50	75	1,200 [566]	34,400 [10.1]	3.50	22,400 [6.6]	2.42	8.20
36 (PJL) (PCL) (PDL)	RCFL-H*3617(ROLA-070E03)	35,400 [10.4]	26,700 [7.8]	8,700 [2.5]	11.50	13.50	75	1,175 [554]	34,200 [10.0]	3.56	22,200 [6.5]	2.46	8.20
	RCFL-H*3617(ROLA-070E04)	35,400 [10.4]	26,700 [7.8]	8,700 [2.5]	11.50	13.50	75	1,175 [554]	34,200 [10.0]	3.56	22,200 [6.5]	2.46	8.20
	RCFL-H*3621	33,400 [9.8]	24,350 [7.1]	9,050 [2.7]	10.50	13.00	75	1,075 [507]	34,400 [10.1]	3.46	22,400 [6.6]	2.40	8.50
	RCFL-H*3621(RGFG-09?ZCM?)	34,600 [10.1]	26,200 [7.7]	8,400 [2.5]	11.00	13.00	75	1,200 [566]	34,200 [10.0]	3.54	22,200 [6.5]	2.44	8.20
	RCFL-H*3621(RGFG-10?ZCM?)	34,600 [10.1]	25,600 [7.5]	9,000 [2.6]	11.00	13.00	75	1,200 [566]	33,600 [9.8]	3.38	21,400 [6.3]	2.30	8.20
	RCFL-H*3621(RGGE-06?MCK?)	35,200 [10.3]	26,650 [7.8]	8,550 [2.5]	11.00	13.00	75	1,200 [566]	34,400 [10.1]	3.48	22,400 [6.6]	2.42	8.20
	RCFL-H*3621(RGGE-07?MCK?)	35,200 [10.3]	26,700 [7.8]	8,500 [2.5]	11.00	13.00	75	1,200 [566]	34,600 [10.1]	3.46	22,400 [6.6]	2.40	8.20
	RCFL-H*3621(RGGE-09?ZCM?)	35,600 [10.4]	27,100 [7.9]	8,500 [2.5]	11.50	13.50	75	1,225 [578]	34,200 [10.0]	3.56	22,200 [6.5]	2.46	8.20
	RCFL-H*3621(RGGE-10?ZCM?)	35,400 [10.4]	26,800 [7.9]	8,600 [2.5]	11.00	13.50	75	1,200 [566]	34,200 [10.0]	3.54	22,200 [6.5]	2.44	8.20
	RCFL-H*3621(RGJF-06?MCK?)	35,200 [10.3]	26,650 [7.8]	8,550 [2.5]	11.00	13.00	75	1,200 [566]	34,400 [10.1]	3.48	22,400 [6.6]	2.42	8.20
	RCFL-H*3621(RGJF-07?MCK?)	35,200 [10.3]	26,700 [7.8]	8,500 [2.5]	11.00	13.00	75	1,200 [566]	34,600 [10.1]	3.46	22,400 [6.6]	2.40	8.20
	RCFL-H*3621(RGJF-09?ZCM?)	35,600 [10.4]	27,100 [7.9]	8,500 [2.5]	11.00	13.50	75	1,225 [578]	34,200 [10.0]	3.56	22,200 [6.5]	2.46	8.20
	RCFL-H*3621(RGJF-10?ZCM?)	35,400 [10.4]	26,800 [7.9]	8,600 [2.5]	11.00	13.50	75	1,200 [566]	34,200 [10.0]	3.54	22,200 [6.5]	2.44	8.20
	RCFL-H*3621(RGLE-07?AMK?)	35,400 [10.4]	26,850 [7.9]	8,550 [2.5]	11.00	13.50	75	1,200 [566]	34,400 [10.1]	3.52	22,200 [6.5]	2.44	8.20
	RCFL-H*3621(RGLE-07?BRQ?)	35,800 [10.5]	27,300 [8.0]	8,500 [2.5]	11.50	14.00	75	1,225 [578]	34,000 [10.0]	3.58	22,000 [6.4]	2.48	8.20

① Highest sales volume tested combination required by D.O.E. test procedures.

[ ] Designates Metric Conversions

Performance Data @ AHRI Standard Conditions

Model Numbers		AHRI Cooling Performance							AHRI Heating Performance (70°F [21°C] Indoor)				
		80°F [26.5°C] DB/67°F [19.5°C] WB Indoor Air 95°F [35°C] DB Outdoor Air							Outdoor Air 47°F [8.5°C] DB/ 43°F [6°C] WB DOE High Temp.		Outdoor Air 17°F [–8.5°C] DB/ 15°F [–9.5°C] WB DOE Low Temp.		DOE Region IV HSPF
Outdoor Unit 13P(-)L	Indoor Coil and/or Air Handler	Total Capacity BTU/H [kW]	Net Sens. BTU/H [kW]	Net Latent BTU/H [kW]	EER	SEER	Snd. Rate dB	Indoor CFM [L/s]	BTU/H [kW]	COP	BTU/H [kW]	COP	
Rev. 5/17/12	RCFL-H*3621(RGLE-10?BRM?)	35,800 [10.5]	27,150 [8.0]	8,650 [2.5]	11.50	14.00	75	1,200 [566]	34,000 [10.0]	3.62	22,000 [6.4]	2.50	8.20
	RCFL-H*3621(RGLT-07?AMK?)	34,800 [10.2]	25,500 [7.5]	9,300 [2.7]	11.00	13.50	75	1,150 [543]	34,000 [10.0]	3.60	21,800 [6.4]	2.48	8.20
	RCFL-H*3621(RGLT-07?BRQ?)	34,800 [10.2]	25,700 [7.5]	9,100 [2.7]	11.50	13.50	75	1,200 [566]	34,000 [10.0]	3.57	22,000 [6.4]	2.46	8.20
	RCFL-H*3621(RGLT-10?BRM?)	35,600 [10.4]	26,850 [7.9]	8,750 [2.6]	11.50	14.00	75	1,175 [554]	34,000 [10.0]	3.58	22,000 [6.4]	2.48	8.20
	RCFL-H*3621(RGPE-05?BMK?)	35,200 [10.3]	26,650 [7.8]	8,550 [2.5]	11.00	13.00	75	1,200 [566]	34,400 [10.1]	3.48	22,400 [6.6]	2.42	8.20
	RCFL-H*3621(RGPE-07?AMK?)	35,400 [10.4]	26,950 [7.9]	8,450 [2.5]	11.00	13.00	75	1,225 [578]	34,400 [10.1]	3.50	22,400 [6.6]	2.42	8.20
	RCFL-H*3621(RGPE-07?BRQ?)	35,800 [10.5]	27,300 [8.0]	8,500 [2.5]	11.50	14.00	75	1,225 [578]	34,000 [10.0]	3.58	22,000 [6.4]	2.48	8.20
	RCFL-H*3621(RGPE-10?BRM?)	35,800 [10.5]	27,300 [8.0]	8,500 [2.5]	11.50	14.00	75	1,225 [578]	34,000 [10.0]	3.58	22,000 [6.4]	2.48	8.20
	RCFL-H*3621(RGPT-05?BMK?)	35,200 [10.3]	26,700 [7.8]	8,500 [2.5]	11.00	13.00	75	1,200 [566]	34,600 [10.1]	3.44	22,600 [6.6]	2.40	8.20
	RCFL-H*3621(RGPT-07?AMK?)	34,600 [10.1]	25,500 [7.5]	9,100 [2.7]	11.00	13.00	75	1,200 [566]	34,400 [10.1]	3.47	22,400 [6.6]	2.40	8.20
	RCFL-H*3621(RGPT-07?BRQ?)	35,000 [10.3]	25,900 [7.6]	9,100 [2.7]	11.50	14.00	75	1,175 [554]	34,000 [10.0]	3.58	22,000 [6.4]	2.47	8.20
	RCFL-H*3621(RGPT-10?BRM?)	35,000 [10.3]	25,900 [7.6]	9,100 [2.7]	11.50	14.00	75	1,175 [554]	34,000 [10.0]	3.59	21,800 [6.4]	2.47	8.20
36 (PJL) (PCL) (PDL)	RCFL-H*3621(RGRM-06?MAE?)	34,800 [10.2]	26,350 [7.7]	8,450 [2.5]	11.00	13.00	75	1,175 [554]	34,600 [10.1]	3.40	22,600 [6.6]	2.36	8.20
	RCFL-H*3621(RGRM-09?ZAJ?)	35,400 [10.4]	27,150 [8.0]	8,250 [2.4]	11.00	13.50	75	1,225 [578]	34,400 [10.1]	3.48	22,400 [6.6]	2.42	8.20
	RCFL-H*3621(RGRM-10?ZAJ?)	35,200 [10.3]	26,550 [7.8]	8,650 [2.5]	11.00	13.50	75	1,150 [543]	34,200 [10.0]	3.52	22,200 [6.5]	2.44	8.20
	RCFL-H*3621(RGTM-07?RBG?)	35,200 [10.3]	26,200 [7.7]	9,000 [2.6]	11.50	14.00	75	1,125 [531]	34,000 [10.0]	3.60	22,000 [6.4]	2.48	8.20
	RCFL-H*3621(RGTM-09?ZAJ?)	35,600 [10.4]	27,150 [8.0]	8,450 [2.5]	11.00	13.50	75	1,225 [578]	34,200 [10.0]	3.54	22,200 [6.5]	2.46	8.20
	RCFL-H*3621(RHWB-04WMX36A)	35,200 [10.3]	25,700 [7.5]	9,500 [2.8]	11.50	13.50	75	1,150 [543]	34,200 [10.0]	3.52	22,000 [6.4]	2.42	8.20
	RCFL-H*3621(RHWB-06WMX48A)	35,200 [10.3]	25,800 [7.6]	9,400 [2.8]	11.50	13.50	75	1,175 [554]	34,200 [10.0]	3.50	22,200 [6.5]	2.42	8.20
	RCFL-H*3621(ROCA-070E03)	35,400 [10.4]	26,850 [7.9]	8,550 [2.5]	11.00	13.50	75	1,200 [566]	34,400 [10.1]	3.52	22,400 [6.6]	2.44	8.20
	RCFL-H*3621(ROCA-070E04)	35,400 [10.4]	26,850 [7.9]	8,550 [2.5]	11.00	13.50	75	1,200 [566]	34,400 [10.1]	3.52	22,400 [6.6]	2.44	8.20
	RCFL-H*3621(ROLA-070E03)	35,400 [10.4]	26,700 [7.8]	8,700 [2.5]	11.50	13.50	75	1,175 [554]	34,200 [10.0]	3.58	22,000 [6.4]	2.48	8.20
	RCFL-H*3621(ROLA-070E04)	35,400 [10.4]	26,700 [7.8]	8,700 [2.5]	11.50	13.50	75	1,175 [554]	34,200 [10.0]	3.58	22,000 [6.4]	2.48	8.20
	RCFL-H*3621(ROLA-115E05)	35,600 [10.4]	27,000 [7.9]	8,600 [2.5]	11.50	14.00	75	1,200 [566]	34,000 [10.0]	3.58	22,000 [6.4]	2.48	8.20
	RBHP-21(RCHL-36A1)	35,400 [10.4]	25,650 [7.5]	9,750 [2.9]	11.50	13.50	75	1,175 [554]	36,000 [10.5]	3.50	23,400 [6.9]	2.36	8.20
	RHLL-HM3617(RCSL-H*3617)	35,000 [10.3]	25,950 [7.6]	9,050 [2.7]	11.50	14.00	75	1,200 [566]	34,000 [10.0]	3.58	22,000 [6.4]	2.46	9.00
	RHSL-HM3621(RCSL-H*3621)	34,400 [10.1]	25,350 [7.4]	9,050 [2.7]	11.00	13.00	75	1,200 [566]	34,600 [10.1]	3.44	22,600 [6.6]	2.40	8.50

① Highest sales volume tested combination required by D.O.E. test procedures.

[ ] Designates Metric Conversions

Performance Data @ AHRI Standard Conditions

Model Numbers		AHRI Cooling Performance							AHRI Heating Performance (70°F [21°C] Indoor)				
		80°F [26.5°C] DB/67°F [19.5°C] WB Indoor Air 95°F [35°C] DB Outdoor Air							Outdoor Air 47°F [8.5°C] DB/ 43°F [6°C] WB DOE High Temp.		Outdoor Air 17°F [–8.5°C] DB/ 15°F [–9.5°C] WB DOE Low Temp.		DOE Region IV HSPF
Outdoor Unit 13P(-)L	Indoor Coil and/or Air Handler	Total Capacity BTU/H [kW]	Net Sens. BTU/H [kW]	Net Latent BTU/H [kW]	EER	SEER	Snd. Rate dB	Indoor CFM [L/s]	BTU/H [kW]	COP	BTU/H [kW]	COP	
Rev. 5/17/12	RHSL-HM4221(RCSL-H*4821) ①	41,000 [12.0]	30,350 [8.9]	10,650 [3.1]	11.00	13.00	77	1,400 [661]	41,500 [12.2]	3.60	27,600 [8.1]	2.54	8.50
	RCFL-H*4821	41,000 [12.0]	30,350 [8.9]	10,650 [3.1]	10.50	13.00	77	1,400 [661]	41,500 [12.2]	3.56	27,800 [8.1]	2.54	8.50
	RCFL-H*4821(RGFE-09?ZCM?)	41,000 [12.0]	30,300 [8.9]	10,700 [3.1]	11.00	13.00	77	1,400 [661]	41,500 [12.2]	3.60	27,400 [8.0]	2.58	8.20
	RCFL-H*4821(RGFG-09?ZCM?)	41,000 [12.0]	30,400 [8.9]	10,600 [3.1]	11.00	13.00	77	1,400 [661]	41,500 [12.2]	3.60	27,400 [8.0]	2.58	8.20
	RCFL-H*4821(RGFG-10?ZCM?)	41,000 [12.0]	30,400 [8.9]	10,600 [3.1]	11.00	13.00	77	1,400 [661]	41,500 [12.2]	3.60	27,400 [8.0]	2.58	8.20
	RCFL-H*4821(RGGE-09?ZCM?)	41,500 [12.2]	30,750 [9.0]	10,750 [3.1]	11.00	13.00	77	1,400 [661]	41,000 [12.0]	3.64	27,200 [8.0]	2.60	8.20
	RCFL-H*4821(RGGE-10?ZCM?)	41,000 [12.0]	30,300 [8.9]	10,700 [3.1]	11.00	13.00	77	1,400 [661]	41,500 [12.2]	3.62	27,400 [8.0]	2.58	8.20
	RCFL-H*4821(RGJF-09?ZCM?)	41,500 [12.2]	30,750 [9.0]	10,750 [3.1]	11.00	13.50	77	1,400 [661]	41,000 [12.0]	3.64	27,200 [8.0]	2.60	8.20
	RCFL-H*4821(RGJF-10?ZCM?)	41,000 [12.0]	30,300 [8.9]	10,700 [3.1]	11.00	13.00	77	1,400 [661]	41,500 [12.2]	3.62	27,400 [8.0]	2.60	8.20
	RCFL-H*4821(RGLE-10?BRM?)	41,500 [12.2]	30,700 [9.0]	10,800 [3.2]	11.50	13.50	77	1,400 [661]	41,000 [12.0]	3.72	27,000 [7.9]	2.66	8.20
	RCFL-H*4821(RGLT-07?AMK?)	41,000 [12.0]	29,900 [8.8]	11,100 [3.3]	11.50	13.50	77	1,325 [625]	41,000 [12.0]	3.70	27,000 [7.9]	2.63	8.20
	RCFL-H*4821(RGLT-07?BRQ?)	41,500 [12.2]	31,000 [9.1]	10,500 [3.1]	11.00	13.50	77	1,450 [684]	41,000 [12.0]	3.66	27,200 [8.0]	2.62	8.20
	RCFL-H*4821(RGLT-10?BRM?)	41,500 [12.2]	30,700 [9.0]	10,800 [3.2]	11.00	13.50	77	1,425 [672]	41,000 [12.0]	3.66	27,200 [8.0]	2.62	8.20
42 (PJL) (PCL) (PDL)	RCFL-H*4821(RGPE-07?BRQ?)	41,500 [12.2]	30,700 [9.0]	10,800 [3.2]	11.00	13.50	77	1,400 [661]	41,000 [12.0]	3.68	27,000 [7.9]	2.64	8.20
	RCFL-H*4821(RGPE-10?BRM?)	41,500 [12.2]	30,700 [9.0]	10,800 [3.2]	11.00	13.50	77	1,400 [661]	41,000 [12.0]	3.68	27,000 [7.9]	2.64	8.20
	RCFL-H*4821(RGPT-07?AMK?)	41,000 [12.0]	30,100 [8.8]	10,900 [3.2]	11.00	13.00	77	1,350 [637]	41,500 [12.2]	3.60	27,400 [8.0]	2.56	8.20
	RCFL-H*4821(RGPT-07?BRQ?)	42,000 [12.3]	31,600 [9.3]	10,400 [3.0]	11.50	13.50	77	1,450 [684]	41,000 [12.0]	3.68	27,000 [7.9]	2.61	8.20
	RCFL-H*4821(RGPT-10?BRM?)	41,500 [12.2]	30,700 [9.0]	10,800 [3.2]	11.50	13.50	77	1,425 [672]	41,000 [12.0]	3.68	27,200 [8.0]	2.62	8.20
	RCFL-H*4821(RGRM-09?ZAJ?)	41,000 [12.0]	30,600 [9.0]	10,400 [3.0]	10.50	13.00	77	1,400 [661]	41,500 [12.2]	3.58	27,600 [8.1]	2.56	8.20
	RCFL-H*4821(RGTM-07?RBG?)	41,500 [12.2]	31,200 [9.1]	10,300 [3.0]	11.00	13.00	77	1,475 [696]	41,500 [12.2]	3.60	27,400 [8.0]	2.58	8.20
	RCFL-H*4821(RGTM-09?ZAJ?)	41,500 [12.2]	30,800 [9.0]	10,700 [3.1]	11.00	13.00	77	1,400 [661]	41,000 [12.0]	3.64	27,400 [8.0]	2.60	8.20
	RCFL-H*4821(RHWB-04WMX36A)	41,000 [12.0]	29,900 [8.8]	11,100 [3.3]	11.00	13.00	77	1,325 [625]	40,000 [11.7]	3.50	25,600 [7.5]	2.44	8.20
	RCFL-H*4821(RHWB-06WMX48A)	41,000 [12.0]	29,900 [8.8]	11,100 [3.3]	11.00	13.00	77	1,325 [625]	40,000 [11.7]	3.50	25,600 [7.5]	2.42	8.20
	RCFL-H*4821(ROLA-070E04)	41,500 [12.2]	30,750 [9.0]	10,750 [3.1]	11.00	13.50	77	1,375 [649]	41,000 [12.0]	3.68	27,200 [8.0]	2.62	8.20
	RCFL-H*4821(ROLA-115E05)	41,500 [12.2]	30,750 [9.0]	10,750 [3.1]	11.00	13.50	77	1,400 [661]	41,000 [12.0]	3.66	27,200 [8.0]	2.62	8.20
	RCFL-H*4824	41,000 [12.0]	30,350 [8.9]	10,650 [3.1]	10.50	13.00	77	1,400 [661]	41,500 [12.2]	3.56	27,800 [8.1]	2.54	8.50
	RCFL-H*4824(RGFE-09?ZCM?)	41,000 [12.0]	30,300 [8.9]	10,700 [3.1]	11.00	13.00	77	1,400 [661]	41,500 [12.2]	3.60	27,400 [8.0]	2.58	8.20
	RCFL-H*4824(RGFE-12?RCM?)	41,500 [12.2]	31,050 [9.1]	10,450 [3.1]	11.00	13.50	77	1,450 [684]	41,000 [12.0]	3.64	27,200 [8.0]	2.60	8.20

① Highest sales volume tested combination required by D.O.E. test procedures.

[ ] Designates Metric Conversions

Performance Data @ AHRI Standard Conditions

Model Numbers		AHRI Cooling Performance							AHRI Heating Performance (70°F [21°C] Indoor)				
		80°F [26.5°C] DB/67°F [19.5°C] WB Indoor Air 95°F [35°C] DB Outdoor Air							Outdoor Air 47°F [8.5°C] DB/ 43°F [6°C] WB DOE High Temp.		Outdoor Air 17°F [–8.5°C] DB/ 15°F [–9.5°C] WB DOE Low Temp.		DOE Region IV HSPF
Outdoor Unit 13P(-)L	Indoor Coil and/or Air Handler	Total Capacity BTU/H [kW]	Net Sens. BTU/H [kW]	Net Latent BTU/H [kW]	EER	SEER	Snd. Rate dB	Indoor CFM [L/s]	BTU/H [kW]	COP	BTU/H [kW]	COP	
Rev. 5/17/12	RCFL-H*4824(RGFG-09?ZCM?)	41,000 [12.0]	30,400 [8.9]	10,600 [3.1]	11.00	13.00	77	1,400 [661]	41,500 [12.2]	3.60	27,400 [8.0]	2.58	8.20
	RCFL-H*4824(RGFG-10?ZCM?)	41,000 [12.0]	30,400 [8.9]	10,600 [3.1]	11.00	13.00	77	1,400 [661]	41,500 [12.2]	3.60	27,400 [8.0]	2.58	8.20
	RCFL-H*4824(RGFG-12?RCM?)	41,500 [12.2]	31,000 [9.1]	10,500 [3.1]	11.00	13.50	77	1,450 [684]	41,000 [12.0]	3.64	27,200 [8.0]	2.60	8.20
	RCFL-H*4824(RGGE-09?ZCM?)	41,500 [12.2]	30,750 [9.0]	10,750 [3.1]	11.00	13.00	77	1,400 [661]	41,000 [12.0]	3.64	27,200 [8.0]	2.60	8.20
	RCFL-H*4824(RGGE-10?ZCM?)	41,000 [12.0]	30,300 [8.9]	10,700 [3.1]	11.00	13.00	77	1,400 [661]	41,500 [12.2]	3.62	27,400 [8.0]	2.58	8.20
	RCFL-H*4824(RGGE-12?RCM?)	41,500 [12.2]	30,700 [9.0]	10,800 [3.2]	11.00	13.50	77	1,375 [649]	41,000 [12.0]	3.70	27,000 [7.9]	2.64	8.20
	RCFL-H*4824(RGJF-09?ZCM?)	41,500 [12.2]	30,750 [9.0]	10,750 [3.1]	11.00	13.50	77	1,400 [661]	41,000 [12.0]	3.64	27,200 [8.0]	2.60	8.20
	RCFL-H*4824(RGJF-10?ZCM?)	41,000 [12.0]	30,300 [8.9]	10,700 [3.1]	11.00	13.00	77	1,400 [661]	41,500 [12.2]	3.62	27,400 [8.0]	2.60	8.20
	RCFL-H*4824(RGJF-12?RCM?)	41,500 [12.2]	30,700 [9.0]	10,800 [3.2]	11.00	13.50	77	1,375 [649]	41,000 [12.0]	3.70	27,000 [7.9]	2.64	8.20
	RCFL-H*4824(RGLE-07?BRQ?)	41,500 [12.2]	30,750 [9.0]	10,750 [3.1]	11.00	13.50	77	1,400 [661]	41,000 [12.0]	3.68	27,200 [8.0]	2.62	8.20
	RCFL-H*4824(RGLE-10?BRM?)	41,500 [12.2]	30,700 [9.0]	10,800 [3.2]	11.50	13.50	77	1,400 [661]	41,000 [12.0]	3.72	27,000 [7.9]	2.66	8.20
	RCFL-H*4824(RGLE-12?ARM?)	41,500 [12.2]	30,700 [9.0]	10,800 [3.2]	11.00	13.50	77	1,425 [672]	41,000 [12.0]	3.70	27,000 [7.9]	2.66	8.20
	RCFL-H*4824(RGLT-07?BRQ?)	41,500 [12.2]	31,000 [9.1]	10,500 [3.1]	11.00	13.50	77	1,450 [684]	41,000 [12.0]	3.66	27,200 [8.0]	2.62	8.20
42 (PJL) (PCL) (PDL)	RCFL-H*4824(RGLT-10?BRM?)	41,500 [12.2]	30,700 [9.0]	10,800 [3.2]	11.00	13.50	77	1,425 [672]	41,000 [12.0]	3.66	27,200 [8.0]	2.62	8.20
	RCFL-H*4824(RGLT-12?ARM?)	41,500 [12.2]	30,650 [9.0]	10,850 [3.2]	11.50	14.00	77	1,375 [649]	41,000 [12.0]	3.72	27,000 [7.9]	2.66	8.20
	RCFL-H*4824(RGPE-07?BRQ?)	41,500 [12.2]	30,700 [9.0]	10,800 [3.2]	11.00	13.50	77	1,400 [661]	41,000 [12.0]	3.68	27,000 [7.9]	2.64	8.20
	RCFL-H*4824(RGPE-10?BRM?)	41,500 [12.2]	30,700 [9.0]	10,800 [3.2]	11.00	13.50	77	1,400 [661]	41,000 [12.0]	3.68	27,200 [8.0]	2.64	8.20
	RCFL-H*4824(RGPE-12?ARM?)	41,500 [12.2]	30,700 [9.0]	10,800 [3.2]	11.00	13.50	77	1,425 [672]	41,000 [12.0]	3.70	27,000 [7.9]	2.64	8.20
	RCFL-H*4824(RGPT-07?BRQ?)	42,000 [12.3]	31,600 [9.3]	10,400 [3.0]	11.50	13.50	77	1,450 [684]	41,000 [12.0]	3.68	27,000 [7.9]	2.61	8.20
	RCFL-H*4824(RGPT-10?BRM?)	41,500 [12.2]	30,700 [9.0]	10,800 [3.2]	11.50	13.50	77	1,425 [672]	41,000 [12.0]	3.68	27,200 [8.0]	2.62	8.20
	RCFL-H*4824(RGPT-12?ARM?)	42,000 [12.3]	31,150 [9.1]	10,850 [3.2]	11.50	14.00	77	1,375 [649]	41,000 [12.0]	3.72	27,000 [7.9]	2.66	8.20
	RCFL-H*4824(RGRM-09?ZAJ?)	41,000 [12.0]	30,600 [9.0]	10,400 [3.0]	10.50	13.00	77	1,400 [661]	41,500 [12.2]	3.58	27,600 [8.1]	2.56	8.20
	RCFL-H*4824(RGRM-12?RAJ?)	41,500 [12.2]	31,050 [9.1]	10,450 [3.1]	11.00	13.00	77	1,425 [672]	41,500 [12.2]	3.62	27,400 [8.0]	2.60	8.20
	RCFL-H*4824(RGTM-07?RBG?)	41,500 [12.2]	31,200 [9.1]	10,300 [3.0]	11.00	13.00	77	1,475 [696]	41,500 [12.2]	3.60	27,400 [8.0]	2.58	8.20
	RCFL-H*4824(RGTM-09?ZAJ?)	41,500 [12.2]	30,800 [9.0]	10,700 [3.1]	11.00	13.00	77	1,400 [661]	41,000 [12.0]	3.64	27,400 [8.0]	2.60	8.20
	RCFL-H*4824(RGTM-10?RBG?)	41,500 [12.2]	30,750 [9.0]	10,750 [3.1]	11.00	13.50	77	1,425 [672]	41,000 [12.0]	3.66	27,200 [8.0]	2.62	8.20
	RCFL-H*4824(RHWB-08WRX60A)	41,500 [12.2]	30,600 [9.0]	10,900 [3.2]	11.50	14.00	77	1,350 [637]	39,500 [11.6]	3.60	25,200 [7.4]	2.50	8.20
	RCFL-H*4824(RHWB-10WRX60A)	42,000 [12.3]	31,400 [9.2]	10,600 [3.1]	11.50	14.00	77	1,400 [661]	39,500 [11.6]	3.60	25,200 [7.4]	2.50	8.20

① Highest sales volume tested combination required by D.O.E. test procedures.

[ ] Designates Metric Conversions

Performance Data @ AHRI Standard Conditions

Model Numbers		AHRI Cooling Performance							AHRI Heating Performance (70°F [21°C] Indoor)				
		80°F [26.5°C] DB/67°F [19.5°C] WB Indoor Air 95°F [35°C] DB Outdoor Air							Outdoor Air 47°F [8.5°C] DB/ 43°F [6°C] WB DOE High Temp.		Outdoor Air 17°F [–8.5°C] DB/ 15°F [–9.5°C] WB DOE Low Temp.		DOE Region IV HSPF
Outdoor Unit 13P(-)L	Indoor Coil and/or Air Handler	Total Capacity BTU/H [kW]	Net Sens. BTU/H [kW]	Net Latent BTU/H [kW]	EER	SEER	Snd. Rate dB	Indoor CFM [L/s]	BTU/H [kW]	COP	BTU/H [kW]	COP	
Rev. 5/17/12 42 (PJL) (PCL) (PDL)	RCFL-H*4824(ROLA-070E04)	41,500 [12.2]	30,750 [9.0]	10,750 [3.1]	11.00	13.50	77	1,375 [649]	41,000 [12.0]	3.66	27,200 [8.0]	2.62	8.20
	RCFL-H*4824(ROLA-115E05)	41,500 [12.2]	30,750 [9.0]	10,750 [3.1]	11.00	13.50	77	1,400 [661]	41,000 [12.0]	3.66	27,200 [8.0]	2.62	8.20
	RBHP-24(RCHL-48A1)	40,000 [11.7]	28,250 [8.3]	11,750 [3.4]	11.50	14.00	77	1,400 [661]	41,500 [12.2]	3.60	28,000 [8.2]	2.66	9.00
	RHLL-HM4821(RCSL-H*4821)	42,000 [12.3]	31,350 [9.2]	10,650 [3.1]	11.50	14.00	77	1,400 [661]	41,000 [12.0]	3.74	27,000 [7.9]	2.66	9.00
48 (PJL) (PCL) (PDL) (PYL)	RHSL-HM4821(RCSL-H*4821) ①	46,500 [13.6]	33,950 [9.9]	12,550 [3.7]	10.50	13.00	77	1,600 [755]	46,000 [13.5]	3.54	30,600 [9.0]	2.60	8.50
	RCFL-H*4821	45,500 [13.3]	32,950 [9.7]	12,550 [3.7]	10.50	13.00	77	1,475 [696]	46,000 [13.5]	3.58	30,400 [8.9]	2.58	8.50
	RCFL-H*4821(RGLE-10?BRM?)	47,500 [13.9]	35,700 [10.5]	11,800 [3.5]	11.00	13.50	77	1,600 [755]	45,500 [13.3]	3.62	30,200 [8.8]	2.62	8.50
	RCFL-H*4821(RGPE-07?BRQ?)	47,000 [13.8]	35,250 [10.3]	11,750 [3.4]	11.00	13.00	77	1,600 [755]	46,000 [13.5]	3.58	30,400 [8.9]	2.60	8.50
	RCFL-H*4821(RGPE-10?BRM?)	47,000 [13.8]	34,850 [10.2]	12,150 [3.6]	11.00	13.50	77	1,550 [731]	45,500 [13.3]	3.64	30,200 [8.8]	2.64	8.50
	RCFL-H*4824	45,500 [13.3]	32,950 [9.7]	12,550 [3.7]	10.50	13.00	77	1,475 [696]	46,000 [13.5]	3.58	30,400 [8.9]	2.58	8.50
	RCFL-H*4824(RGGE-12?RCM?)	46,500 [13.6]	33,950 [9.9]	12,550 [3.7]	11.00	13.00	77	1,575 [743]	46,000 [13.5]	3.60	30,400 [8.9]	2.60	8.50
	RCFL-H*4824(RGJF-12?RCM?)	46,500 [13.6]	33,950 [9.9]	12,550 [3.7]	11.00	13.00	77	1,575 [743]	45,500 [13.3]	3.60	30,400 [8.9]	2.62	8.50
	RCFL-H*4824(RGLE-10?BRM?)	46,500 [13.6]	33,900 [9.9]	12,600 [3.7]	11.00	13.00	77	1,600 [755]	45,500 [13.3]	3.62	30,200 [8.8]	2.62	8.50
	RCFL-H*4824(RGLE-12?ARM?)	46,500 [13.6]	33,400 [9.8]	13,100 [3.8]	11.00	13.50	77	1,525 [720]	45,500 [13.3]	3.66	30,000 [8.8]	2.66	8.50
	RCFL-H*4824(RGLT-12?ARM?)	46,500 [13.6]	34,300 [10.0]	12,200 [3.6]	11.00	13.00	77	1,650 [779]	46,000 [13.5]	3.56	30,400 [8.9]	2.58	8.50
	RCFL-H*4824(RGPE-10?BRM?)	46,500 [13.6]	33,950 [9.9]	12,550 [3.7]	11.00	13.00	77	1,625 [767]	46,000 [13.5]	3.58	30,400 [8.9]	2.60	8.50
	RCFL-H*4824(RGPE-12?ARM?)	46,500 [13.6]	33,400 [9.8]	13,100 [3.8]	11.00	13.50	77	1,525 [720]	45,500 [13.3]	3.66	30,000 [8.8]	2.66	8.50
	RCFL-H*4824(RGPT-12?ARM?)	46,500 [13.6]	34,300 [10.0]	12,200 [3.6]	11.00	13.00	77	1,650 [779]	46,000 [13.5]	3.56	30,600 [9.0]	2.58	8.50
	RCFL-H*4824(RGTM-07?RBG?)	46,000 [13.5]	32,650 [9.6]	13,350 [3.9]	11.00	13.00	77	1,475 [696]	45,500 [13.3]	3.62	30,200 [8.8]	2.62	8.50
	RCFL-H*4824(RHWB-08WRX60A)	47,000 [13.8]	33,500 [9.8]	13,500 [4.0]	11.50	14.00	77	1,450 [684]	45,500 [13.3]	3.70	29,800 [8.7]	2.66	8.50
	RCFL-H*4824(RHWB-10WRX60A)	47,000 [13.8]	33,500 [9.8]	13,500 [4.0]	11.50	14.00	77	1,475 [696]	45,500 [13.3]	3.70	29,800 [8.7]	2.66	8.50
	RHLL-HM4821(RCSL-H*4821)	47,500 [13.9]	34,950 [10.2]	12,550 [3.7]	11.50	14.00	77	1,600 [755]	45,500 [13.3]	3.72	29,800 [8.7]	2.68	9.00
	RHLL-HM4824(RCSL-H*4824)	48,000 [14.1]	36,500 [10.7]	11,500 [3.4]	11.50	14.00	77	1,625 [767]	45,500 [13.3]	3.74	29,800 [8.7]	2.68	9.00
	RHSL-HM4824(RCSL-H*4824)	46,500 [13.6]	33,950 [9.9]	12,550 [3.7]	10.50	13.00	77	1,600 [755]	46,000 [13.5]	3.54	30,600 [9.0]	2.60	8.50
60 (PJL) (PCL) (PDL) (PYL)	RHLL-HM6024(RCSL-H*6024) ①	58,000 [17.0]	41,500 [12.2]	16,500 [4.8]	10.90	13.00	77	1,775 [838]	55,000 [16.1]	3.64	34,200 [10.0]	2.58	8.50
	RHKL-HM6024(RCSL-H*6024)	58,000 [17.0]	41,500 [12.2]	16,500 [4.8]	10.50	13.00	77	1,800 [849]	55,500 [16.3]	3.70	34,200 [10.0]	2.54	8.50

① Highest sales volume tested combination required by D.O.E. test procedures.

[ ] Designates Metric Conversions

Electrical and Physical Data

Model Number 13PJL	ELECTRICAL							PHYSICAL					
	Phase Frequency (Hz) Voltage (Volts)	Compressor		Fan Motor Full Load Amperes (FLA)	Minimum Circuit Ampacity Amperes	Fuse or HACR Circuit Breaker		Outdoor Coil			Refrig. Per Circuit Oz. [g]	Weight	
		Rated Load Amperes (RLA)	Locked Rotor Amperes (LRA)			Minimum Amperes	Maximum Amperes	Face Area Sq. Ft. [m²]	No. Rows	CFM [L/s]		Net Lbs. [kg]	Shipping Lbs. [kg]
Rev. 5/17/2012													
18	1-60-208/230	9/9	48	0.6	12/12	15/15	20/20	11.06 [1.03]	1	1700 [802]	91 [2580]	144 [65.3]	152 [65.3]
24	1-60-208/230	12.8/12.8	58.3	0.6	17/17	20/20	25/25	11.06 [1.03]	1	2370 [1118]	91 [2580]	130 [59]	138 [59]
30	1-60-208/230	14.1/14.1	73	0.8	19/19	25/25	30/30	13.72 [1.27]	1	2800 [1321]	101 [2863]	198 [89.8]	208 [89.8]
36	1-60-208/230	17/17	96.7	1.2	23/23	30/30	35/35	16.39 [1.52]	1	3575 [1687]	109 [3090]	215 [97.5]	227 [97.5]
42	1-60-208/230	21.8/21.8	112	1.2	29/29	35/35	50/50	21.85 [2.03]	1	3575 [1687]	150 [4252]	202 [91.6]	214 [91.6]
48	1-60-208/230	21.8/21.8	117	1.2	29/29	35/35	50/50	21.85 [2.03]	1	3575 [1687]	141 [3997]	205 [93]	217 [93]
60	1-60-208/230	26.3/26.3	134	1.2	35/35	45/45	60/60	21.85 [2.03]	1	3575 [1687]	228 [6464]	209 [94.8]	221 [94.8]

Model Number 13PCL	ELECTRICAL							PHYSICAL					
	Phase Frequency (Hz) Voltage (Volts)	Compressor		Fan Motor Full Load Amperes (FLA)	Minimum Circuit Ampacity Amperes	Fuse or HACR Circuit Breaker		Outdoor Coil			Refrig. Per Circuit Oz. [g]	Weight	
		Rated Load Amperes (RLA)	Locked Rotor Amperes (LRA)			Minimum Amperes	Maximum Amperes	Face Area Sq. Ft. [m²]	No. Rows	CFM [L/s]		Net Lbs. [kg]	Shipping Lbs. [kg]
Rev. 1/30/2013													
36	3-60-208/230	10.4/10.4	73	1.3	15/15	20/20	20/20	16.39 [1.52]	1	3575 [1687]	109 [3090]	215 [97.5]	227 [97.5]
42	3-60-208/230	13.5/13.5	88	1.3	19/19	25/25	30/30	21.85 [2.03]	1	3575 [1687]	150 [4252]	202 [91.6]	214 [91.6]
48	3-60-208/230	13.7/13.7	83.1	1.3	19/19	25/25	30/30	21.85 [2.03]	1	3575 [1687]	141 [3997]	205 [93]	217 [93]
60	3-60-208/230	15.6/15.6	110	1.3	21/21	25/25	35/35	21.85 [2.03]	1	3575 [1687]	228 [6464]	209 [94.8]	221 [94.8]

Model Number 13PDL	ELECTRICAL							PHYSICAL					
	Phase Frequency (Hz) Voltage (Volts)	Compressor		Fan Motor Full Load Amperes (FLA)	Minimum Circuit Ampacity Amperes	Fuse or HACR Circuit Breaker		Outdoor Coil			Refrig. Per Circuit Oz. [g]	Weight	
		Rated Load Amperes (RLA)	Locked Rotor Amperes (LRA)			Minimum Amperes	Maximum Amperes	Face Area Sq. Ft. [m²]	No. Rows	CFM [L/s]		Net Lbs. [kg]	Shipping Lbs. [kg]
Rev. 1/30/2013													
36	3-60-460	5.8	38	0.6	8	15	15	16.39 [1.52]	1	3575 [1687]	109 [3090]	215 [97.5]	227 [97.5]
42	3-60-460	6/6	44	0.6	9/9	15/15	15/15	21.85 [2.03]	1	3575 [1687]	150 [4252]	202 [91.6]	214 [91.6]
48	3-60-460	6.2	41	0.6	9/9	15/15	15/15	21.85 [2.03]	1	3575 [1687]	141 [3997]	205 [93]	217 [93]
60	3-60-460	7.8	52	0.6	11/11	15/15	15/15	21.85 [2.03]	1	3575 [1687]	228 [6464]	209 [94.8]	221 [94.8]

Model Number 13PYL	ELECTRICAL							PHYSICAL					
	Phase Frequency (Hz) Voltage (Volts)	Compressor		Fan Motor Full Load Amperes (FLA)	Minimum Circuit Ampacity Amperes	Fuse or HACR Circuit Breaker		Outdoor Coil			Refrig. Per Circuit Oz. [g]	Weight	
		Rated Load Amperes (RLA)	Locked Rotor Amperes (LRA)			Minimum Amperes	Maximum Amperes	Face Area Sq. Ft. [m²]	No. Rows	CFM [L/s]		Net Lbs. [kg]	Shipping Lbs. [kg]
Rev. 1/30/2013													
48	3-60-575	4.8	33	0.5	7	15	15	21.85 [2.03]	1	3575 [1687]	141 [3997]	205 [93]	217 [93]
60	3-60-575	5.8	38.9	0.5	8/8	15/15	15/15	21.85 [2.03]	1	3575 [1687]	228 [6464]	209 [94.8]	221 [94.8]

NOTE: Factory Refrigerant Charge includes refrigerant for 15 feet of standard line set.

[ ] Designates Metric Conversions

Unit Dimensions

Model Number 13P(-)L	Height "H" (Inches) [mm]	Length "L" (Inches) [mm]	Width "W" (Inches) [mm]
18, 24	26 1/4 [666.75]	23 5/8 [600.07]	23 5/8 [600.07]
30	26 1/4 [666.75]	27 5/8 [701.67]	27 5/8 [701.67]
36	27 3/8 [695.32]	31 5/8 [803.27]	31 5/8 [803.27]
42, 48, 60	35 3/8 [898.52]	31 5/8 [803.27]	31 5/8 [803.27]

[ ] Designates Metric Conversions

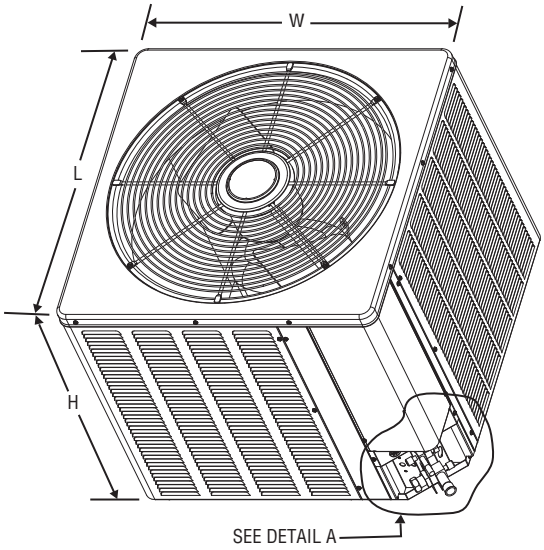

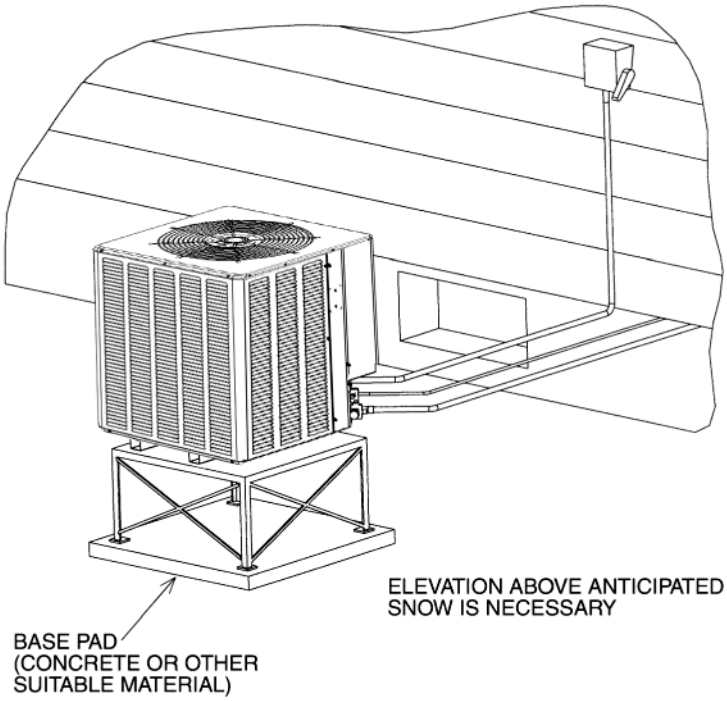

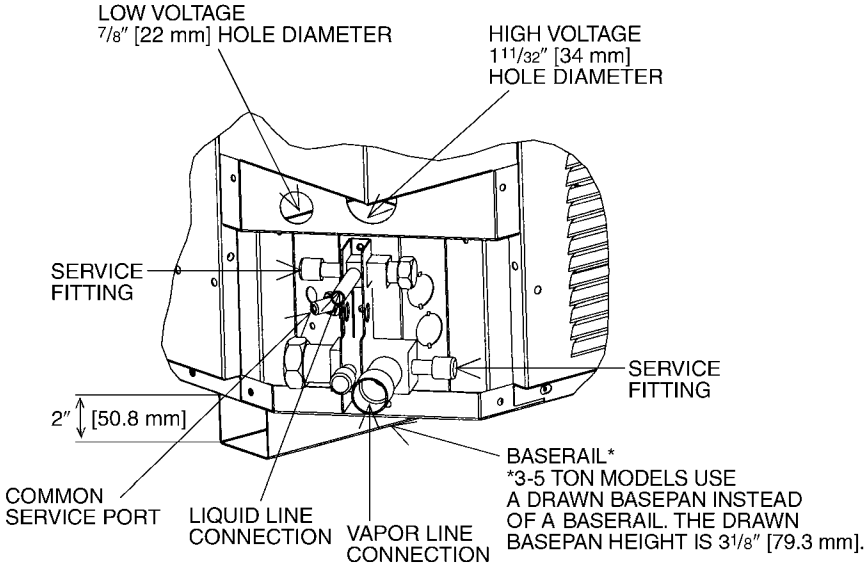

DETAIL A

Heat Pump Refrigerant Line Size Information

System Capacity	Line Size Connection Size (Inch I.D.) [mm]	Line Size (Inch O.D.) [mm]	Liquid Line Sizing (R410A) Outdoor Unit Above or Below Indoor Coil (Heat Pumps Only)					
			Total Equivalent Length—Feet [m]					
			25 [7.62]	50 [15.24]	75 [22.86]	100 [30.48]	125 [38.10]	150 [45.72]
			Maximum Vertical Separation—Feet [m]					
1 1/2 Ton	3/8" [9.53]	1/4 [6.35]	25 [7.62]	40 [12.19]	25 [7.62]	9 [2.74]	N/A	N/A
		5/16 [7.94]	25 [7.62]	50 [15.24]	62 [18.90]	58 [17.68]	53 [16.15]	49 [14.94]
		3/8* [9.53]	25 [7.62]	50 [15.24]	75 [22.86]	72 [21.95]	70 [21.34]	68 [20.73]
2 Ton	3/8" [9.53]	1/4 [6.35]	23 [7.01]	N/A	N/A	N/A	N/A	N/A
		5/16 [7.94]	25 [7.62]	36 [10.97]	29 [8.84]	23 [7.01]	16 [4.88]	9 [2.74]
		3/8* [9.53]	25 [7.62]	50 [15.24]	72 [21.95]	70 [21.34]	68 [20.73]	65 [19.81]
2 1/2 Ton	3/8" [9.53]	1/4 [6.35]	25 [7.62]	N/A	N/A	N/A	N/A	N/A
		5/16 [7.94]	25 [7.62]	49 [14.94]	38 [11.58]	27 [8.23]	17 [5.18]	6 [1.83]
		3/8* [9.53]	25 [7.62]	50 [15.24]	68 [20.73]	65 [19.81]	62 [18.90]	58 [17.68]
3 Ton	3/8" [9.53]	5/16 [7.94]	25 [7.62]	50 [15.24]	37 [11.28]	22 [6.71]	7 [2.13]	N/A
		3/8* [9.53]	25 [7.62]	50 [15.24]	68 [20.73]	63 [19.20]	58 [17.68]	53 [16.15]
3 1/2 Ton	3/8" [9.53]	5/16 [7.94]	25 [7.62]	23 [7.01]	4 [1.22]	N/A	N/A	N/A
		3/8* [9.53]	25 [7.62]	50 [15.24]	43 [13.11]	36 [10.97]	30 [9.14]	24 [7.32]
4 Ton	3/8" [9.53]	3/8* [9.53]	25 [7.62]	46 [14.02]	38 [11.58]	30 [9.14]	22 [6.71]	15 [4.57]
		1/2 [12.7]	25 [7.62]	50 [15.24]	56 [17.07]	55 [16.76]	53 [16.15]	52 [15.85]
5 Ton	3/8" [9.53]	3/8* [9.53]	25 [7.62]	50 [15.24]	56 [17.07]	44 [13.41]	32 [9.75]	20 [6.10]
		1/2 [12.7]	25 [7.62]	50 [15.24]	75 [22.86]	81 [24.69]	79 [24.08]	76 [23.16]

NOTES:
*Standard line size
N/A = Application not recommended.

Suction Line Length/Size versus Capacity Multiplier (R-410A)								
Unit Size		1 1/2 Ton	2 Ton	2 1/2 Ton	3 Ton	3 1/2 Ton	4 Ton	5 Ton
Suction Line Connection Size		3/4" [19.05] I.D.			7/8" [22.23] I.D.			
Suction Line Run— Feet [m]		5/8" [15.88 mm] O.D. Opt. 3/4" [19.05 mm] O.D. Std.*		5/8" [15.88 mm] O.D. Opt. 3/4" [19.05 mm] O.D. Std.* 7/8" [22.23 mm] O.D. Opt.	3/4" [19.05 mm] O.D. Opt. 7/8" [22.23 mm] O.D. Std.*		7/8" [22.23 mm] O.D. Opt. 1 1/8" [28.58 mm] O.D. Std.*	
25' [7.62]	Optional	1.00	1.00	1.00	1.00	1.00	1.00	1.00
	Standard	1.00	1.00	1.00	1.00	1.00	1.00	1.00
	Optional	—	—	1.00	—	—	—	—
50' [15.24]	Optional	0.98	0.98	0.96	0.98	0.99	0.99	0.99
	Standard	0.99	0.99	0.98	0.99	0.99	0.99	0.99
	Optional	—	—	0.99	—	—	—	—
100' [30.48]	Optional	0.95	0.95	0.94	0.96	0.96	0.96	0.97
	Standard	0.96	0.96	0.96	0.97	0.98	0.98	0.98
	Optional	—	—	0.97	—	—	—	—
150' [45.72]	Optional	0.92	0.92	0.91	0.94	0.94	0.95	0.94
	Standard	0.93	0.94	0.93	0.95	0.96	0.96	0.97
	Optional	—	—	0.95	—	—	—	—

NOTES:
*Standard line size
N/A = Using suction line larger than shown in chart will result in poor oil return and is not recommended.

[ ] Designates Metric Conversions

GENERAL TERMS OF LIMITED WARRANTY*

Rheem will furnish a replacement for any part of this product which fails in normal use and service within the applicable period stated, in accordance with the terms of the limited warranty.

***For complete details of the Limited and Conditional Warranties, including applicable terms and conditions, contact your local contractor or the Manufacturer for a copy of the product warranty certificate.**

Conditional Parts
(Registration Required) .....Ten (10) Years

The new degree of comfort.™

In keeping with its policy of continuous progress and product improvement, Rheem reserves the right to make changes without notice.

Rheem Heating, Cooling & Water Heating • P.O. Box 17010
Fort Smith, Arkansas 72917 • www.rheem.com

Rheem Canada Ltd./Ltée • 125 Edgeware Road, Unit 1
Brampton, Ontario • L6Y 0P5

INTEGRATED HOME COMFORT

PRINTED IN U.S.A 3/13 QG FORM NO. P11-804 REV. 1